VHF NAVIGATION AND COMMUNICATIONS RECEIVER

51X-2

OVERHAUL MANUAL

COLLINS RADIO COMPANY

GUARANTEE

The equipment described herein is sold under the following guarantee:

Collins agrees to repair or replace, without charge, any equipment, parts, or accessories which are defective as to design, workmanship or material, and which are returned to Collins at its factory, transportation prepaid, provided

(a) Notice of the claimed defect is given Collins within one (1) year from date of delivery and goods are returned in accordance with Collins' instructions.

(b) Equipment, accessories, tubes, and batteries not manufactured by Collins or from Collins' designs are subject to only such adjustments as Collins may obtain from the supplier thereof.

(c) No equipment or accessory shall be deemed to be defective if, due to exposure or excessive moisture in the atmosphere or otherwise after delivery, it shall fail to operate in a normal or proper manner.

Collins further guarantees that any radio transmitter described herein will deliver full radio frequency power output at the antenna lead when connected to a suitable load, but such guarantee shall not be construed as a guarantee of any definite coverage or range of said apparatus.

The guarantee of these paragraphs is void if equipment is altered or repaired by others than Collins or its authorized service center.

No other warranties, expressed or implied, shall be applicable to any equipment sold hereunder, and the foregoing shall constitute the Buyer's sole right and remedy under the agreements in this paragraph contained. In no event shall Collins have any liability for consequential damages, or for loss, damage or expense directly or indirectly arising from the use of the products, or any inability to use them either separately or in combination with other equipment or materials, or from any other cause.

HOW TO RETURN MATERIAL OR EQUIPMENT. If, for any reason, you should wish to return material or equipment, whether under the guarantee or otherwise, you should notify us, giving full particulars including the details listed below, insofar as applicable. If the item is thought to be defective, such notice must give full information as to nature of defect and identification (including part number if possible) of part considered defective. (With respect to tubes we suggest that your adjustments can be speeded up if you give notice of defect directly to the tube manufacturer.) Upon receipt of such notice, Collins will promptly advise you respecting the return. Failure to secure our advice prior to the forwarding of the goods or failure to provide full particulars may cause unnecessary delay in handling of your returned merchandise.

ADDRESS:

Collins Radio Company
Sales Service Department
Cedar Rapids, Iowa

INFORMATION NEEDED:

(A) Type number, name, and serial number of equipment
(B) Date of delivery of equipment
(C) Date placed in service
(D) Number of hours of service
(E) Nature of trouble
(F) Cause of trouble if known
(G) Part number (9 or 10 digit number) and name of part thought to be causing trouble
(H) Item or symbol number of same obtained from parts list or schematic
(I) Collins' number (and name) of unit sub-assemblies involved in trouble
(J) Remarks

HOW TO ORDER REPLACEMENT PARTS. When ordering replacement parts, you should direct your order as indicated below and furnish the following information insofar as applicable. To enable us to give you better replacement service, please be sure to give us complete information.

ADDRESS:

Collins Radio Company
Sales Service Department
Cedar Rapids, Iowa

INFORMATION NEEDED:

(A) Quantity required
(B) Collins' part number (9 or 10 digit number) and description
(C) Item or symbol number obtained from parts list or schematic
(D) Collins' type number, name, and serial number of principal equipment
(E) Unit sub-assembly number (where applicable)

OVERHAUL MANUAL

523-0022-003
15 JUNE 1959

VHF NAVIGATION AND COMMUNICATIONS RECEIVER 51X-2

©COLLINS RADIO COMPANY
1959, 1960

CEDAR RAPIDS, IOWA, U.S.A.

PRINTED IN THE UNITED STATES OF AMERICA

Collins

OVERHAUL MANUAL

RECORD OF REVISIONS

Overhaul Manual - VHF Navigation and Communications Receiver 51X-2	LOCATION
ASSIGNED TO (JOB TITLE)	

REV. NO.	REVISION DATE	INSERTION DATE	BY	REV. NO.	REVISION DATE	INSERTION DATE	BY
1	Mar 15/60						

RETAIN THIS RECORD IN THE FRONT OF MANUAL OR CHAPTER.
ON RECEIPT OF REVISIONS, INSERT REVISED PAGES IN THE MANUAL, AND ENTER DATE INSERTED AND INITIALS.

VHF NAVIGATION AND COMMUNICATIONS RECEIVER 51X-2

TABLE OF CONTENTS

Page

DESCRIPTION AND OPERATION 1

1. General 1
2. Description of Units 1
   - A. Transmitter-Receiver Combinations 1
   - B. Receiver 51X-2 (Mechanical Description) 1
   - C. Receiver 51X-2 (Electrical Description) 2
   - D. Control Unit 614G-1 2
   - E. Control Unit 614F-1 2
   - F. Control Unit 614X-1 2
   - G. Control Units 614U-1 and 614U-2 3
   - H. Control Units 614U-3 and 614U-4 3
   - I. VHF Communications Antenna 37R-1 4
   - J. VHF Communications Antenna 37R-2 4
   - K. VOR Navigation Antenna 37J-3 4
   - L. VHF Communications/Navigation Antenna 137X-1 4
   - M. Equipment Available 4
   - N. Specifications 6
   - O. Adapter Kit 49T-2 8
     - (1) General 8
     - (2) Equipment Supplied 10
     - (3) 51X-2 Modification Procedure 10
     - (4) Assembling 51X-2 Into Case 11
3. Principles of Operation 11
   - A. General 11
   - B. Frequency Selecting System 11

DISASSEMBLY 101

1. General 101
2. Removal of Receiver from Shockmount and Exterior Case 101
3. Removal of Modules 101
4. Removal of Module Cover 101
5. Replacement of Crystals in Low Frequency Oscillator 101
6. Replacement of Crystals in VHF Oscillator 101

8. Removal of Variable I-F Coil Assembly 103
9. Removal of VHF Oscillator Switch Assembly to Gain Access to Oscillator Tube Socket Components 103
10. Removal of R-F Subassembly from Variable I-F Module 104
11. Removal of Variable J-F Subassembly 104
12. Removal of Frequency Selector Switches 105
    - A. General 105
    - B. Removal of Switch S4 105
    - C. Removal of Switch S5 105
    - D. Removal of Switch S6 107
    - E. Removal of Switch S7 107
    - F. Removal of Switch S9 107
    - G. Removal of Switch S8 107

TABLE OF CONTENTS (CONT)

Page

13. Removal and Disassembly of Frequency Selector 108
    A. General 108
    B. Removal of Frequency Selector 108
    C. Alternate Method of Removal of Frequency Selector 108
    D. Disassembly of Frequency Selector 110

CLEANING 201

1. General 201
2. Modules and Chassis 201
3. Relay Contacts 201
4. Connector 202
5. Dials and Knobs 202
6. Receptacles 202
7. Rotary Switches 202
8. Dust Cover 202
9. Shockmounts 203

INSPECTION 301

1. General 301
2. Covers and Shields 301
3. Dials and Knobs 301
4. Vibration Mounts 301
5. Gears, Metal or Fiber 301
6. R-F Coils 301
7. Connectors 302
8. Insulator, Ceramic or Mycalex 302
9. Jacks 302
10. Transformer and Reactors 302
11. Wiring 302
12. Receptacles 302
13. Relays 302
14. Fixed Composition Resistor 303
15. Fixed Wire-Wound Resistor 303
16. Variable Resistor 303
17. Tube Sockets 303
18. Soldered Terminal Connections 303
19. Rotary Switches 303

ASSEMBLY 501

1. General 501
2. Assembly of Frequency Selector 501
3. Replacement of Frequency Selector Switches 501
    A. General 501
    B. Replacement of S4 501
    C. Replacement of S5 501

TABLE OF CONTENTS (CONT)

Page

D. Replacement of S6 502
E. Replacement of S7 502
F. Replacement of S9 502
G. Replacement of S8 502
4. Replacement of Variable I-F Subassembly 502
5. Replacement of R-F Subassembly on R-F and Variable I-F Module . . 503
6. Replacement of VHF Oscillator Switch Assembly 503
7. Replacement of Variable I-F Coil Assembly 504
8. Replacement of Tuning Motor B1 504
9. Assembly of VHF Oscillator After Replacement of Crystals 504
10. Assembly of Low Frequency Oscillator After Replacement of Crystals . 505
11. Replacement of Module Cover 505
12. Replacement of Modules 505
13. Replacement of Receiver on Shockmount and Exterior Case . . . 505
14. Lubrication 506
A. Recommended Lubricants 506
B. Parts to be Lubricated 506
C. Parts not Requiring Lubrication 507

TESTING 701

1. Servicing and Testing Transistor Circuits 701
A. General 701
B. Test Equipment 701
(1) Transformerless Power Supplies 701
(2) Line Filter 701
(3) Low Sensitivity Multimeter 701
(4) Power Supply 701
C. Electric Soldering Irons 702
(1) Leakage Current 702
(2) Iron Size 702
D. Servicing Practices 702
(1) Heat-Sink when Soldering 702
(2) Removal of Transistors from Operating Circuits . . . 702
(3) Plug- In Transistors 702
(4) Resistance Measurements in Transistor Circuits . . . 702
(5) Power Transistor Heat- Sinks 704
(6) Test Prods 704
2. Performance Test of Receiver 51X-2 704
A. General 704
B. Test Equipment Required 704
C. Nonoperational Check 705
D. Operational Check 705
E. Sensitivity Test Requirements 706
F. Selectivity Test Requirements 706
G. AVC Characteristics 707
H. Squelch Performance 707
I. ATC Output 707

TABLE OF CONTENTS (CONT)

Page

J. Audio Response 708
K. Audio Distortion 708
L. Disabling Circuit 708
M. Spurious Rejection 708
N. Low Supply Voltage Operation 709
O. Alternate Power Supply Operation 709
P. Glide Slope Receiver Power 709
3. Mechanical Alignment of Drive Mechanism 710
4. Electrical Alignment of R-F and Variable I-F Amplifier 715
A. Test Equipment Required 715
B. Conditions 715
C. Variable I-F Alignment 715
D. Alignment of First Crystal Oscillator 715
E. R-F Alignment 717
F. Tracking of 4-Gang Tuning Capacitor 717
5. Evaluation of R-F and Variable I-F Amplifier Module 718
A. VHF Oscillator Output. 718
B. Sensitivity 719
C. Squelch 719
D. Automatic Volume Control 720
6. 500-Kc Passive Filter Alignment 720
A. Insertion Loss 720
B. Bandwidth 720
C. Passband Ripple 720
D. Factory Method of Filter Alignment 720
E. Alignment Using 51X-2 Modules 722
7. Evaluation of 500-Kc Passive Filter 724
A. Evaluation Using Filter Test Jig 724
B. Evaluation Tests Using 51X-2 Modules 724
8. 500-Kc Passive Filter Touch-Up 725
9. I-F and Audio Module Alignment 725
A. Test Equipment Required 726
B. Conditions 726
C. Preliminary Tests 726
D. Electrical Alignment 726
10. Evaluation of I-F and Audio Module 727
A. Conditions 727
B. Selectivity 727
C. Gain 727
D. Squelch 727
E. Noise Limiter 727
F. Automatic Volume Control 728
G. ATCSS Output Level and Frequency Response 728
H. Audio Output Level and Frequency Response 728
I. Audio Distortion 729
J. Receiver Disable 729
K. Adjustment of Transient Blanker Circuit in 516B-3 D-C Power Supply . 729

TABLE OF CONTENTS (CONT)

		Page
L.	Alternate Method 1 of Adjusting Transient Blanker	729
M.	Alternate Method 2 of Adjusting Transient Blanker	730
TROUBLE SHOOTING		801
1.	General	801
2.	Ohmmeter Test of Transistor	801
SPECIAL TOOLS		1001
1.	Special Equipment and Tools Requirements for Overhaul	1001

LIST OF ILLUSTRATIONS

Figure		Page
1	VHF Navigation and Communications Receiver 51X-2	vii
2	Adapter Kit 49T-2, Outline and Mounting Dimensions	9
3	Adapter Kit 49T-2, Wiring Diagram	10
4	Navigation and Communications Receiver 51X-2, Block Diagram	12
5	Circuit Frequencies Employed in the Reception of a 2-Mc Portion of the Reception Spectrum, Block Diagram	14
6	Over-all Frequency Scheme, Block Diagram	15
101	R-F and Variable I-F Module, Top View	102
102	First Injection Oscillator Crystal and Coil Position	102
103	R-F Module, Front Exploded View	103
104	R-F Module, Top View	104
105	R-F Module, Side View	105
106	Variable I-F Module	106
107	Gear Box, Front View	107
108	Gear Box, Top View	108
109	Gear Box, Exploded View	109
701	Receiver 51X-2 Resistance and Voltage Measurements	703
701A	2-Mc Seeking Switch Wire Table	711
701B	50-Kc Seeking Switch Wire Table	712
702	Mechanical Alignment Procedure	713/714
703	Stage Gain Chart	718
704	Filter Test Jig	721
705	Transient Generator, Schematic Diagram	731
706	Navigation and Communications Receiver 51X-2, Schematic Diagram	733/734

LIST OF TABLES

Table		Page
1	Equipment Supplied	4
2	Accessory Equipment	5
3	Available Control Units	5
4	51X-2 Modules	7
5	Electron Tube and Transistor Complement	8
6	Diode Complement	8
501	Recommended Lubricants	506
502	Lubrication Points	506
701	Resistance Measurements for Plug 1 of Main Frame Module	705
702	Channel Vs Crystal Frequency (Mc)	716
703	Band Vs Crystal Frequency (Mc)	719
704	Alignment Sequence	722

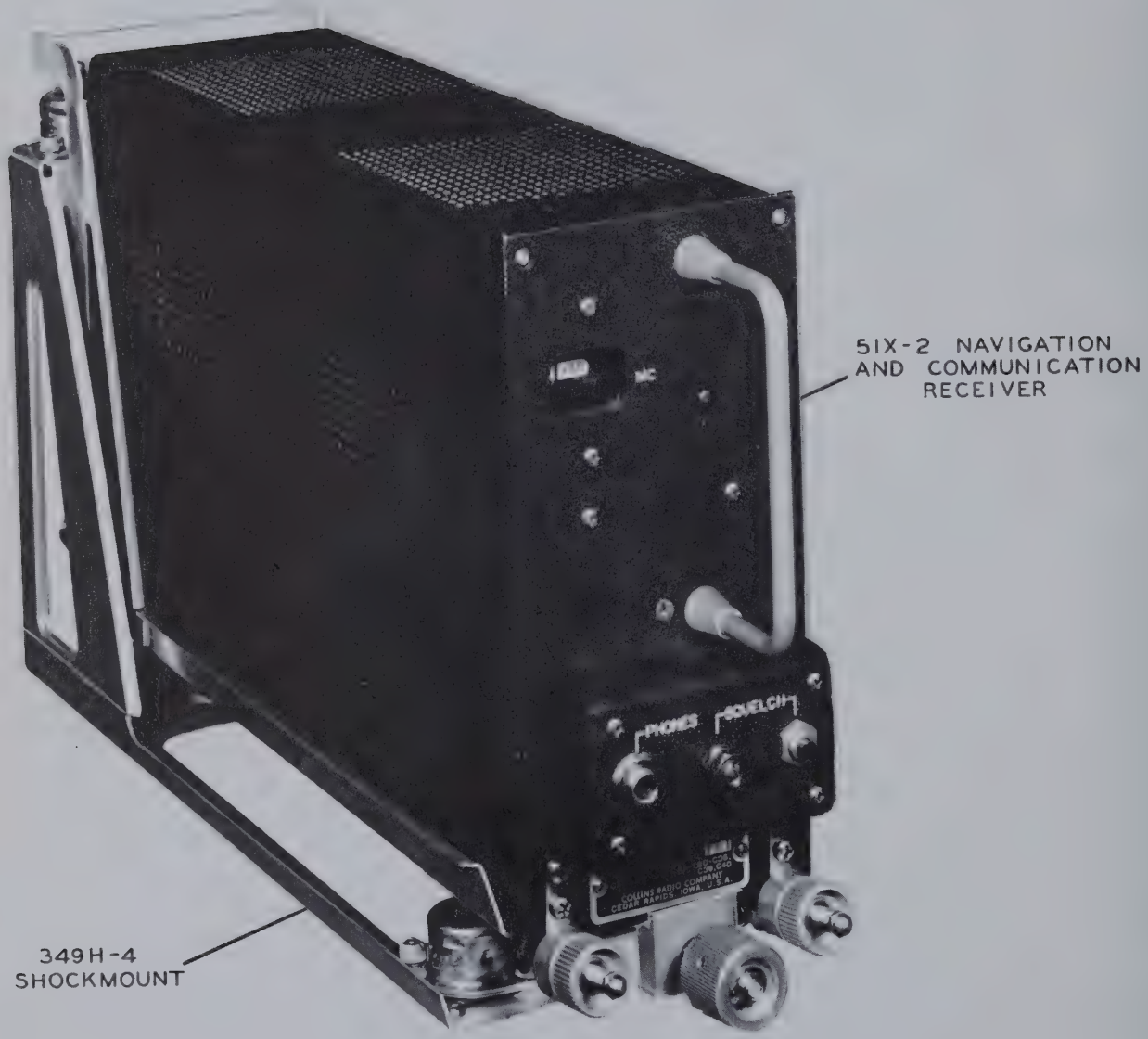

C05 172 P

VHF Navigation and Communications Receiver 51X-2
Figure 1

VHF NAVIGATION AND COMMUNICATIONS RECEIVER 51X-2 DESCRIPTION AND OPERATION

1. GENERAL.

The VHF Navigation and Communications Receiver 51X-2 (see figure 1) is a crystal-controlled, double-conversion, superheterodyne receiver which operates in the frequency range from 108.0 to 151.95 megacycles. A maximum of 880 channels, spaced 50 kc apart, are available in this frequency range. The receiver is entirely remotely controlled.

NOTE: Some sets are purchased with crystal complements that do not include reception frequencies higher than 135.95 mc.

When used alone, the equipment receives amplitude-modulated communication and ATC signals. When used in conjunction with the Collins Instrumentation Unit 344A-1 or 344B-1, the receiver will supply VOR and ILS reception and instrumentation.

2. DESCRIPTION OF UNITS.

A. Transmitter-Receiver Combinations.

Several types of transmitter-receiver combined operations are possible, depending on the type of control unit used. These operations are described in ARINC Characteristic 520A, Airborne VHF Communications System. A brief definition of each type is given in the following subparagraphs.

(1) Single-Channel Simplex (SCS - separate operation of the receiver and transmitter on the same frequency with a common antenna).

The receiver and transmitter may be tuned independently or from a common frequency control. Voice communication on any 50-kc spaced channel between 118.0 and 151.95 mc is possible.

(2) Double-Channel Simplex (DCS - separate operation of the receiver and transmitter with a common antenna; the transmitter tuned six megacycles higher than the receiver).

Double-channel transmit frequencies are specified by ARINC Characteristic 520A as from 124.00 to 126.95 mc, and from 133.0 to 135.9 mc, in 50-kc intervals. Transmitter tuning must be disabled for all other frequencies in double-channel operation. A common frequency control is used.

(3) Double-Channel Duplex (DCD - simultaneous operation of receiver and transmitter; the transmitter tuned six megacycles higher than the receiver).

Double-channel transmit frequencies are given in the preceding paragraph. Transmitter tuning must be disabled for all other frequencies. Separate receiving and transmitting antennas must be used; the transmitter sidetone output and the receiver disabling circuits must be disconnected.

B. Receiver 51X-2 (Mechanical Description).

The 51X-2 is housed in an unpressurized, ARINC standard 3/8 ATR short case which is 3-9/16 inches wide, 7-1/2 inches high, and 12-9/16 inches long. The equipment weighs 10.5 pounds. Equipment weight including Shockmount 349H-4 is 12 pounds.

The receiver is constructed of four modules and a main frame. The main frame contains a three-fourth-inch duct to accommodate cables and plugs and the passive filter module. All

modules except the passive filter are plug-in type. Connections to receiver circuitry are made through a rear connector, Cannon DPA A29C1-34P.

Forced air cooling is not required, however if desired, the 51X-2 may be cooled in accordance with ARINC Specification No. 404. Cooling air is drawn into the unit at the top, pulled through the modules, and exhausted into the shockmount plenum chamber. Baffles distribute the cooling air. Air flow within the modules is controlled to permit uniform component temperature rises.

C. Receiver 51X-2 (Electrical Description).

Receiver circuitry is contained in four modules and the main frame. Module A1, the r-f circuitry, oscillators, and variable i-f circuitry necessary to convert the incoming signal to a 500-kc fixed i-f. The Autopositioner® and frequency selector mechanism also is contained in this module. Module A2, the i-f and audio module, contains three stages of i-f amplification, detector, and audio amplifier circuits. Module A5 is a passive i-f filter.

Two power supplies are available for use with the 51X-2. Module A3 is a Collins D-C Power Supply 516B-3 for use with a 27.5-v d-c supply. Module A4 is an A-C Power Supply 516A-1 for use with a 115-v, 300-1000-cps supply. Both modules will produce the plate voltages required to operate the receiver. A source of 27.5-v d-c is required for operation of relays, channeling mechanisms, and output transistor.

The main frame, designated module A6, contains interconnecting wiring and a passive filter tuned to 500 kc.

D. Control Unit 614G-1.

Control Unit 614G-1 controls 51X-2 Receiver frequency selection, without a companion transmitter, or in SCS systems when independent tuning of the receiver and transmitter is desired. The control unit tunes the receiver in 50-kc steps to 360 frequencies within the range 118.0 mc to 135.9 mc. Two concentric knobs are used for frequency selection. Numerals, read downward as they appear in a vertical slot, represent hundreds, tens, units, tenths, and twentieths of megacycles. An accessory kit, Collins part number 596 1971 004, is available for conversion of the unit to edge-lighted panel mounting.

E. Control Unit 614F-1.

The 614F-1 Control Unit controls frequency selection of both a 51X-2 Receiver and a companion 17L-( ) Transmitter in an SCS system. The unit is physically similar to Control Unit 614G-1, with additional switch wafers required to control the transmitter. Frequency selection is accomplished in the same manner. An accessory kit, Collins part number 596-1971 004, is available for converting the unit to edge-lighted panel mounting.

F. Control Unit 614X-1.

The 614X-1 Control Unit controls frequency selection of both a 51X-2 Receiver and a companion 17L-( ) Transmitter in SCS or DCD systems. An external relay, Collins part number 974 0207 00, is required for DCD operation. The relay opens receiver muting and disabling circuits and causes the transmitter double-channel relay to be energized for DCD operation.

The relay is not required for DCS operation. For DCS operation, the control unit is connected according to ARINC Characteristic 520A.

® Registered U. S. Patent Office.

A toggle switch at the top of Control Unit 614X-1 is used to change from SCS to DCD operation, if the external relay is employed.

NOTE: If the external relay is not used, the toggle switch is employed to switch from SCS to DCS operation by moving it to the position marked DCD on the control unit.

Control Unit 614X-1 provides 50-kc spacing of channels within the range 118.00 to 135.95 mc for SCS operation. For DCD or DCS operation, the transmitter frequency is automatically set 6 mc higher than the receiver frequency, in the ranges 124.00 to 126.95 mc and 133.00 to 135.95 mc. The unit includes a blanking switch that prevents double-channel operation on all other frequencies. An accessory kit, 540 7372 004, is available for converting the unit to edge-lighted panel mounting.

G. Control Units 614U-1 and 614U-2.

Control Units 614U-1 and 614U-2 control frequency selection of both a 51X-2 Receiver and a 17L-7 Transmitter in SCS or DCD systems. They provide 50-kc tuning increments from 118.00 mc to 151.95 mc, which includes the extended range. An external relay, Collins part number 974 0207 00, is required for DCD operation. The relay opens the receiver disabling circuits and disconnects the transmitter sidetone from the receiver output. The relay is not required for DCS operation. For DCS operation, the control unit is connected according to ARINC Characteristic 520A.

A toggle switch at the top of the unit is used to change from SCS to DCD operation if the external relay is employed. The toggle switch is also employed to switch from SCS to DCS operation by moving it to the position marked DCD on the control unit.

Control Units 614U-1 and 614U-2 provide 50-kc spacing of channels within the range 118.00 to 151.95 mc with adjustable stop to 135.95 mc for SCS operation. For DCD or DCS operation, the receiver tunes 118.00 to 120.95 and 127.00 to 129.95 mc, and the transmitter frequency is automatically set 6 mc higher than the receiver frequency in the ranges 124.00 to 126.95 mc and 133.00 to 135.95 mc. The unit includes a blanking switch that prevents double-channel operation on all other frequencies.

The units have an ON-OFF switch with which the associated equipment can be turned on and off by remote control of power switching relays.

The 614U-1 and 614U-2 are identical electrically and physically except that the 614U-1 is black and the 614U-2 is gray.

H. Control Units 614U-3 and 614U-4.

Control Units 614U-3 and 614U-4 control the frequency selection of a 51X-2 Receiver and a 51V-3 Glide Slope Receiver. Both the communications channel and the glide slope channel are selected when the frequency selecting dial is set up.

The units have an ON-OFF switch with which the associated equipment can be turned off and on. The units afford frequency control of the 51X-2 through the range 108.00-151.95 mc in 50-kc steps.

The 614U-3 and the 614U-4 are identical except that the 614U-3 is black and the 614U-4 is gray.

I. VHF Communications Antenna 37R-1.

The 37R-1 is a quarter-wave antenna designed to receive or transmit vertically polarized signals. It has a standing-wave ratio of less than 2 to 1 in the frequency range from 118.0 to 136.0 mc. The antenna is connected to the 51X-2 Receiver by a 52-ohm coaxial cable terminated in a UG-21/U connector. Because the receiver uses the smaller type 52-ohm cable, a BNC-to-N adapter is necessary for reducing the antenna connector to the receiver cable.

J. VHF Communications Antenna 37R-2.

The 37R-2 is a vertically polarized communication antenna. The 37R-2 has a standing-wave ratio of 2:1 or less over the frequency range 116 to 152 mc. The nominal input impedance is 52 ohms. The 37R-2 is plastic-foam filled with a Fiberglas covering. The antenna weighs 2 pounds.

The 37R-2 has a drag of 0.5 pound at 250 mph and a drag of 1.3 pounds at 400 mph at 0 degree angle of attack.

K. VOR Navigation Antenna 37J-3.

The 37J-3 is a horizontally polarized navigation antenna for receiving VOR and localizer signals. Frequency range is 108.0 to 122.0 mc with a standing-wave ratio of 5 to 1 or less. Impedance is 52 ohms into unbalanced line. The antenna is constructed of cast aluminum and formed and welded sheet aluminum. The 37J-3 is used with the 51X-2 when the 51X-2 is used in a 51R-4 navigation system.

L. VHF Communication/Navigation Antenna 137X-1.

The 137X-1 VHF Communication/Navigation Antenna provides essentially the same electrical characteristics as the 37J-3 and 37R-1 antennas. Thus the 137X-1 can be used as a common antenna for both a communication and navigation system.

The standing-wave ratio at the communication terminal is less than 2:1 from 118.0 to 136.0 mc and at the navigation terminal is less than 5:1 from 108.0 to 127.0 mc.

The antenna will withstand forces encountered at Mach .9 at sea level in an attitude of 5 degrees pitch and 5 degrees vaw. The 137X-1 drag is approximately 2.7 pounds at 250 mph with 0 degree pitch and yaw and 15.3 pounds at 600 mph.

The 137X-1 is plastic filled with a Fiberglas covering. It weighs 4.7 pounds. The 137X-1 is CAA certified and passes military specifications.

Coaxial Relay 68U-1 must be used with the 137X-1 antenna to transfer the navigation/communication receiver from the navigation connector of the antenna to the communication portion of the antenna.

M. Equipment Available.

TABLE 1. EQUIPMENT SUPPLIED

TYPE NUMBER	DESCRIPTION	PART NUMBER
51X-2	VHF Navigation and Communications Receiver. Extended frequency coverage, less power supply module.	522 0833 004
51X-2	VHF Navigation and Communications Receiver. 108.0-151.95 mc, less power supply.	522 0833 014

TABLE 1. EQUIPMENT SUPPLIED (Cont)

TYPE NUMBER	DESCRIPTION	PART NUMBER
51X-2	VHF Navigation and Communication Receiver. 108.0-151.95 mc, with a-c power supply.	522 0833 034
51X-2	VHF Navigation and Communication Receiver. 108.0-151.95 mc, with d-c power supply.	522 0833 054

TABLE 2. ACCESSORY EQUIPMENT

TYPE NUMBER	DESCRIPTION	WEIGHT (lb)	PART NUMBER
349H-4	3/8 ATR Shockmount	1.5	522 0736 005
----	Control Unit. See table 3	---	----
390E-1	Dual Shockmount 51X-2 and 344B-1	2.8	522 0932 005
390E-2	Dual Shockmount 51X-2 and 17L-7	2.8	522 0933 005
37R-1	Communications Antenna	3.5	504 0543 004
37R-2	Communications Antenna	2.0	522 1135 012
37J-2 or 3	Omnirange Antenna	5.75	505 6800 004
137X-1	Communication/Navigation Antenna	4.7	522 1136 011
49T-2	51X-2 to 51X-1 Adapter Kit	2.5	522 1007 004
68U-1	Coaxial Relay		504 4271 003
Kit	Module Extension Cables		545 4966 00

TABLE 3. AVAILABLE CONTROL UNITS

TYPE	DESCRIPTION	PART NUMBER
614G-1	Controls 51X-2 over the 118.0-135.95 mc range.	522 9063 005
614F-1	Controls 51X-2/17L-7 over the 118.0-135.95 mc range.	522 9018 005
614X-1	Same function as 614F-1, plus an SCS/DCD switch.	522 0271 005
614U-1	Controls 51X-2/17L-7 over 118.0-151.95 mc range in 50-kc steps, DCD, ON-OFF and audio/squelch, black.	522 1221 003
614U-2	Same as 614U-1 except gray.	522 1222 003
614U-3	Controls 51X-2/51V-3, over 108.0-151.95 mc range in 50-kc steps, ON-OFF switch and audio/squelch, black.	522 1223 003
614U-4	Same as 614U-3 except gray.	522 1224 003
614U-7/8	Controls 51X-2 and 51V-3 (108.0-151.95 mc with 50-kc spacing) and DMET.	522 1473 003
314U-10	Controls 51X-2/51V-3 over the 108.0-135.9 mc range.	522 9028 005

NOTE: By grounding pin 20 on the receiver rear connector, the 51X-2 can be operated with any remote control unit designed according to ARINC Characteristic 520A over the part of the frequency range covered by the control unit.

N. Specifications.

Size	ARINC standard short 3/8 ATR Case, 3-9/16 x 7-1/2 x 12-9/16 inches.
Weight	10.5 pounds without shockmount.
Mounting	On shockmount 349H-4 or with similar units on an ARINC, shockmounted, equipment shelf or on Dual Shockmount 390E-1 or 390E-2.
Number of units	A main frame and four modules.
Ambient temperature range	Normal operating range +10°C to +55°C with slightly reduced performance to -40°C. Thirty minutes operation at +70°C.
Humidity	95-100% for 48 hours.
Altitude	Normal operation up to 30,000 feet.
Power Requirements	With 516B-3 27.5 v d-c, -20% +10%; 1.2 amperes normal, 3.3 amperes channeling peak.
	With 516A-1 115 v 300-1000 cps, 25 watts; 27.5 v d-c, -20% +10%, 0.1 ampere normal, 2.2 amperes channeling peak.
Frequency range	108.0 to 151.95 mc, 50-kc channel spacing.
Number of channels	880 maximum.
Channel selection	Two Autopositioners and an ARINC 520A remote control unit.
Frequency stability	±0.0035% under the following conditions taken singly:
	a. D-c input varied from 24 to 29 volts. b. A-c input varied from 105 to 125 volts. c. Temperature varied from +10°C to +70°C. d. Humidity varied from 10% to 95% at +50°C e. Altitude varied from sea level to 30,000 feet.
Selectivity	40 kc minimum at 6 db down; 77 kc maximum at 60 db down.
Sensitivity	NMT 3 uv input for 6 db signal-plus-noise to noise ratio.
Spurious response	NLT 80 db down (include images).
Squelch	Carrier operated noise silencer with squelch threshold control.
Noise limiter	Series peak noise limiter.

Agc characteristic	4 db variation maximum from 5 uv to 100,000 uv.
Agc time constant	0.5 second from 108.0 to 117.95 mc. 0.1 second from 118.0 to 151.95 mc.
Input impedance	52 ohms unbalanced; swr less than 4 to 1
Output impedances	Audio - 500 ohms balanced. ATC/VOR/LOC - 1000 ohms unbalanced, variable, at least 0.5 v output with 1000 uv input, 30% modulation into 100K load.
Output power	Capable of 100 mw with 3 uv input, 30% modulation.
Fidelity	Audio-NMT 6 db variation from 300 to 3750 cps, down at least 20 db at 120 cps and 5750 cps. ATC/VOR/LOC NMT - 6 db variation from 30 cps to 22 kc.
Harmonic distortion	7.5% maximum at 30% modulation, 100 mw output. 20% maximum at 90% modulation, 100 mw output.
Receiver disabling	The receiver will be disabled when 27.5 v d-c is applied to pin 23 of the rear connector.
Tubes and transistors	5654 -6 5670 -3 DT4-17 or 2N158A -1 DT4-18 or 2N1504 -3 (d-c supply only) 2N398 -1 (d-c supply only) Total 14

TABLE 4. 51X-2 MODULES

TYPE NUMBER	DESCRIPTION		DIMENSIONS (inches)	WEIGHT (pounds)	COLLINS PART NUMBER
	MODULE	FUNCTION			
51X-2	A1	R-F and Variable I-F Amplifier	12x3-1/2x3-1/2	4.8	542 4718 005
	A2	I-F and Audio	7-1/2 x3x2-1/4	2.9	542 4748 006
516B-3 or	A3	D-C Power Supply, 27.5-v d-c input	2x3-1/4x3	0.81	522 1091 004
516A-1 Mod. 1	A4	A-C Power Supply, 115-v 300-1000 cps input	2x3-1/4x3	0.75	522 0440 004
---	A5	500-Kc Filter	----	---	542 4777 004
	A6	Frame			542 4776 005

TABLE 5. ELECTRON TUBE AND TRANSISTOR COMPLEMENT

LOCATION	FUNCTION	SYMBOL	TYPE
Module A1	R-F Amplifier	V1	5654
	First Mixer	V2	5654
	Variable I-F Amplifier	V3	5654
	Second Mixer/Oscillator	V4	5670
	First Injection Oscillator	V5	5670
Module A2	First I-F Amplifier	V1	5654
	Second I-F Amplifier	V2	5654
	Third I-F Amplifier	V3	5654
	A-F Amp/Squelch	V4	5670
	Audio Output	Q1	DT4-17 or 2N158A
Module A3	Power Supply Oscillator	Q1	DT4-18 or 2N1504
	Power Supply Oscillator	Q2	DT4-18 or 2N1504
	Power Supply Blanker	Q3	DT4-18 or 2N1504
	Power Supply Blanker	Q4	2N398

TABLE 6. DIODE COMPLEMENT

LOCATION	FUNCTION	SYMBOL	TYPE
Module A2	AGC Rectifier	CR1	HD2182
	AGC Rectifier	CR2	601C
	Detector	CR3	601C
	Noise Limiter	CR4	601C
	AGC Gate	CR5	601C
	Bias Gate	CR6	601C
	Voltage Reference	CR7	ZA-35 or 1N1320
Module A3	Rectifier	CR1	1N539 or 1N1695
	Rectifier	CR2	1N539 or 1N1695
	Voltage Reference	CR3	651C0
Module A4	Rectifier	CR1	1N1695 or 1N540

O. Adapter Kit 49T-2.

(1) General.

Adapter Kit 49T-2 (see figure 2) adapts the 51X-2 Receiver to the mounting and external circuitry of a 51X-1 or 51X-1A installation. It consists of a 1/2 ATR long case outfitted with proper plugs, jacks, and wiring so that Receiver 51X-2 can be modified slightly at the front panel and slipped into the case and then the whole unit inserted into a shock-mount or rack in the place of Receiver 51X-1 or 51X-1A. The case is wired completely

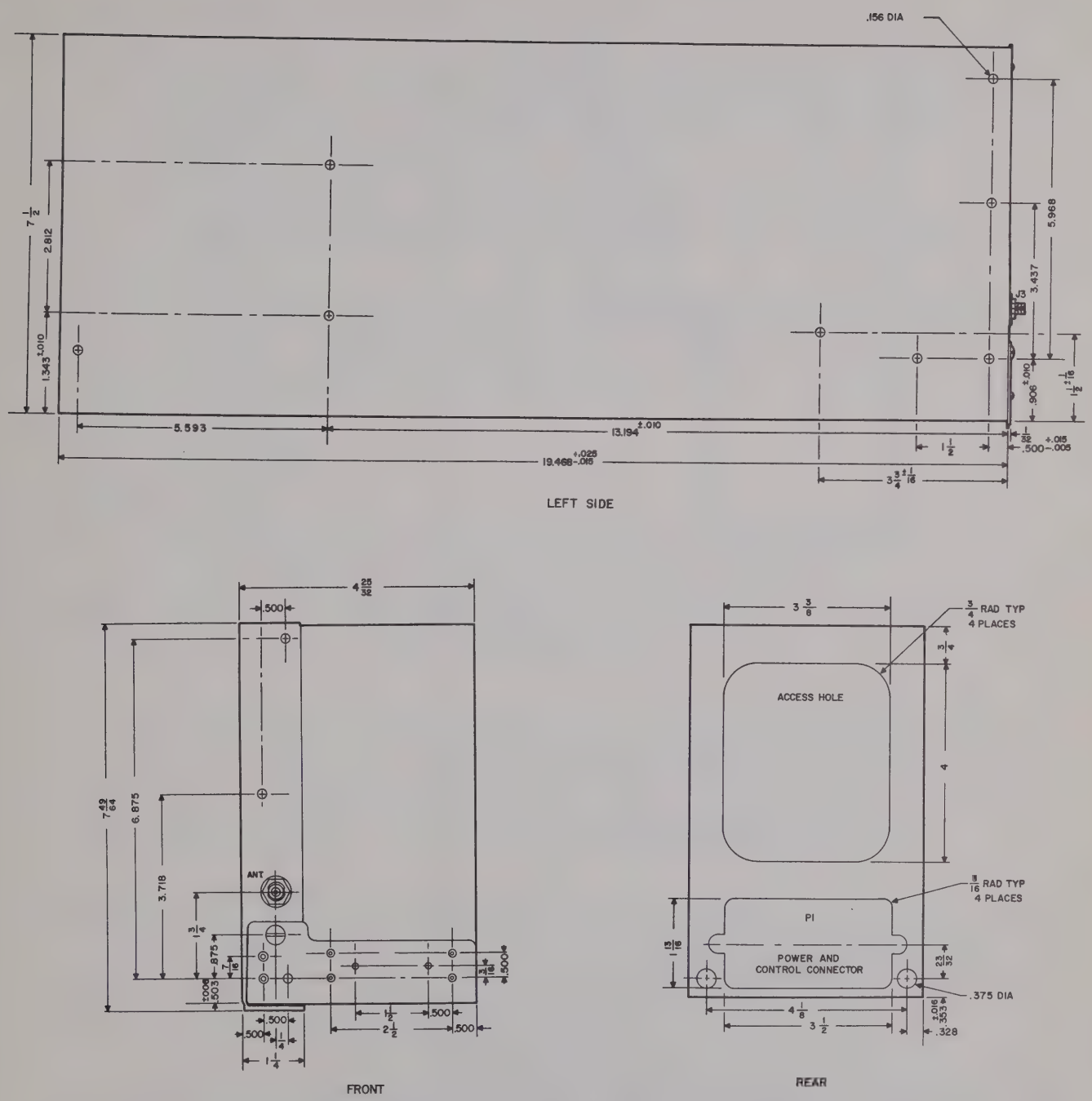

C05 177 5

Adapter Kit 49T-2, Outline and Mounting Dimensions
Figure 2

with plugs and jacks to accommodate the 51X-2. See the wiring diagram, figure 3. The antenna connection is brought out to a receptacle on the front panel in approximately the same position as that of the 51X-1. No changes in external circuitry are necessary.

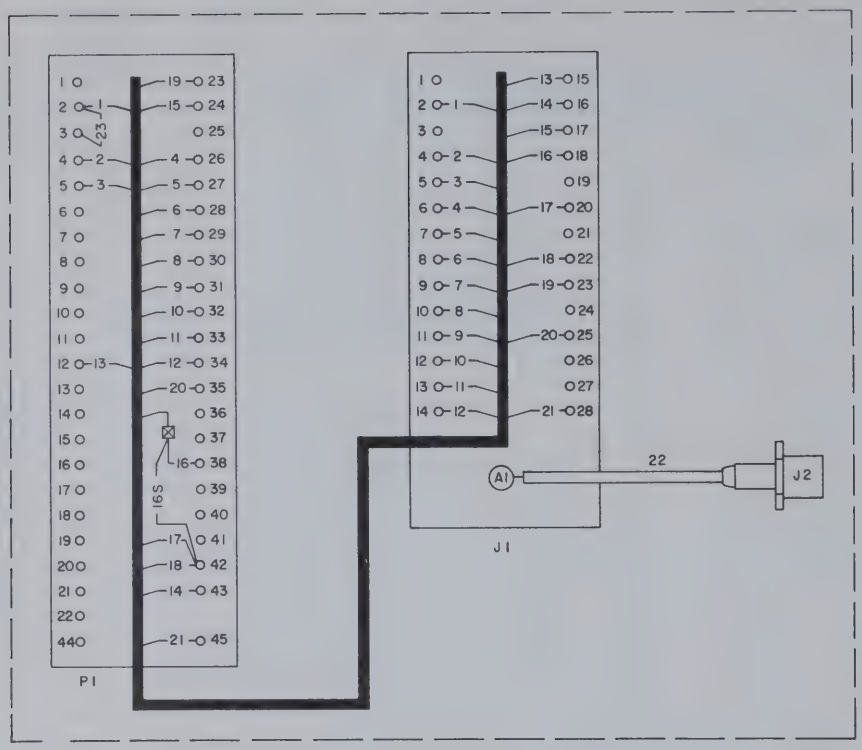

WIRE CHART

WIRE NO.	WIRE CODE	TO	FROM
1	TB902	P1-2	J1-2
2	TV93	P1-4	J1-4
3	TV95	P1-5	J1-5
4	TA935	P1-26	J1-6
5	TA936	P1-27	J1-7
6	TA956	P1-28	J1-8
7	TA9023	P1-29	J1-9
8	TA9125	P1-30	J1-10
9	TA9126	P1-31	J1-11
10	TA9235	P1-32	J1-12
11	TA9236	P1-33	J1-13
12	TA9026	P1-34	J1-14
13	TA9256	P1-12	J1-15
14	TA9356	P1-43	J1-16
15	TA9123	P1-24	J1-17
16	TVS906	P1-38	J1-18
16S	TVO	P1-42	NOT CONNECTED
17	TA9025	P1-42	J1-20
18	TBO	P1-42	J1-22
19	TV903	P1-23	J1-23
20	TV4	P1-35	J1-25
21	TV8	P1-45	J1-28
22	COAX	J2	J1-A1
23	BA	P1-2	P1-3

C05 129 3

Adapter Kit 49T-2, Wiring Diagram
Figure 3

(2) Equipment Supplied.

Adapter Kit 49T-2 consists of the following:

(a) A 1/2 ATR long case equipped with front antenna receptacle for coaxial plug and concerted to accept Receiver 51X-2.

(b) Front panel adapter plate for attaching to the front panel of Receiver 51X-2.

(3) 51X-2 Modification Procedure.

(a) Remove the case (if supplied) from Receiver 51X-2.

(b) Remove the name plate from Receiver 51X-2.

(c) Remove the rack mounting hooks from Receiver 51X-2.

(d) Remove the front panel adapter plate from its plastic bag, and set it in position on the front of the 51X-2 over the name-plate holes. The twist lock fastener should be in the upper left-hand position.

(e) Insert new, longer screws through the rack mounting hooks and through the front panel adapter plate. Install one hook at the extreme right end and one at the extreme left end of the adapter plate. Align the name-plate mounting holes, and tighten the screws.

(f) Attach the name plate with new, longer screws.

(4) Assembling 51X-2 Into Case.

(a) Insert the 51X-2 into the new 1/2 ATR case, and carefully engage the rear plug. If the plug seats before the rear of the front panel of the 51X-2 is flush with the front edge of the case, remove the receiver, and remove the two shims from between receptacle J1 and the rear bracket.

(b) Reassemble receptacle J1, and again insert the receiver into the case. If the rear of the front panel is flush with the case front edge, turn the rear and the front twist lock fasteners to secure the receiver in the case.

(c) Set the receiver and case into the associated shockmount or rack, engage the rear connector, and secure with fasteners over the front rack mounting hooks.

(d) Attach the antenna to the antenna receptacle.

3. PRINCIPLES OF OPERATION.

A. General.

The VHF Navigation and Communications Receiver 51X-2 employs a dual-conversion superheterodyne circuit with a variable intermediate frequency and a fixed intermediate frequency followed by detector, squelch, and audio stages. Either of two power supply modules, an a-c supply or a d-c supply, may be plugged into the receiver. The receiver is capable of tuning to any of its 880 channels through information received from a remote control unit via a 13-wire cable.

The high-frequency and the low-frequency injection oscillators employ quartz crystals for frequency control. A passive filter inserted into the output of the second mixer provides passband shaping of the second i-f signal. Semiconductor diodes are employed in the detector circuit and in the avc circuit. The audio signal passes through a squelch circuit, an audio amplifier, and an audio filter to the audio output stage. The audio output stage employs a type DT4-17, PNP transistor.

Mechanical positioning of the tuning elements is accomplished by the use of two Collins Autopositioners, one for the two-megacycle increments and one for the 50-kc increments. The 50-kc positioning system and the two-megacycle system are connected through a differential mechanism so that movement of the 50-kc system is added to the movement of the two-megacycle system for purposes of tuning the variable capacitor. In this way, accurate and complete coverage of the tuning spectrum is achieved.

The receiver also provides signals and switching functions that are useful to other external units of a navigation system such as a signal for ATCSS and switching for antenna relay and VOR-ILS.

B. Frequency Selecting System.

Refer to the block diagram, figure 4. The antenna coil, the grid and plate circuits of the r-f amplifier, and the grid circuit of the first mixer are tuned by a ganged tuning capacitor through the frequency range of 108.0 to 151.95 mc. The first heterodyning oscillator tube V5, is controlled by selectable crystals. The output of this oscillator is always on the low-frequency side of the associated reception frequency. The output starts at 97.975 mc and goes through 139.975 mc, on a two-megacycle basis, using a total of 22 crystals. Each crystal output, when injected into the first mixer, produces a usable i-f spectrum two megacycles wide,

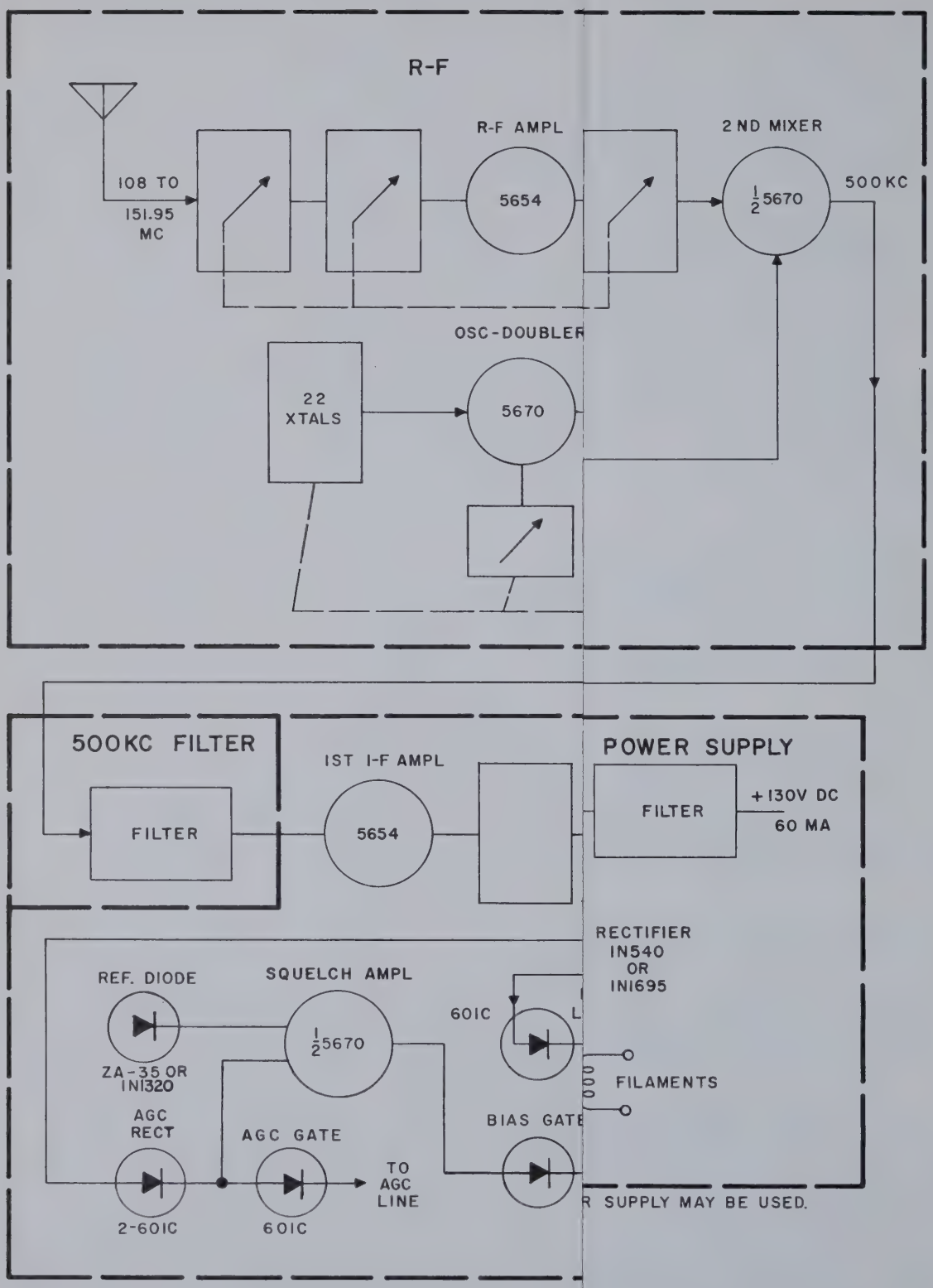

Navigation and Communications Receiver 51X-2,
Block Diagram
Figure 4

Thus all radio signals appearing within a two-megacycle portion of the input circuit of the radio will be heterodyned to within the first i-f spectrum of the receiver. The first i-f amplifier is variably tuned and tunes through the two-megacycle spectrum. The radio is designed to receive frequencies every 50 kc. Therefore, a crystal-controlled oscillator (half of V4) with appropriate signal outputs separated by 50 kc is used to heterodyne the variable i-f signal to a fixed i-f of 500 kc. The second crystal oscillator employs but 20 crystals, thus, it would appear that on a 50-kc basis, only one megacycle would be covered. However, each crystal is used twice, once with the variable i-f 500 kc below the crystal frequency and once with the variable i-f 500 kc above the crystal frequency so that the total of 40 channels is obtained over a two-megacycle portion of the tuning range. Refer to figure 5 for a block diagram that shows the crystal outputs and frequencies involved in one two-megacycle portion of the tuning range of the receiver. Figure 6 shows the complete complement of heterodyning frequencies and resulting signal frequencies.

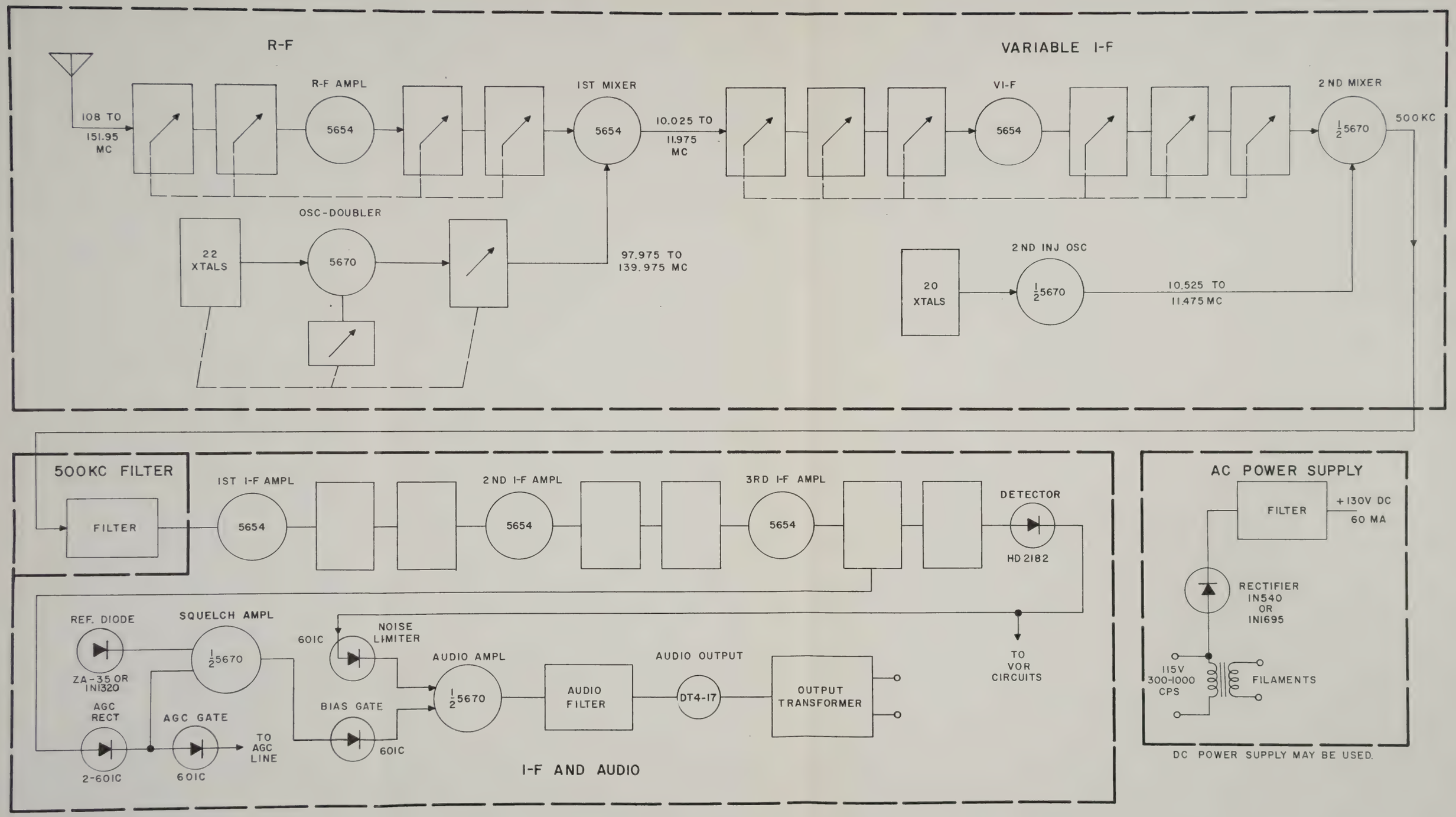

Navigation and Communications Receiver 51X-2,
Block Diagram
Figure 4

Thus all radio signals appearing within a two-megacycle portion of the input circuit of the radio will be heterodyned to within the first i-f spectrum of the receiver. The first i-f amplifier is variably tuned and tunes through the two-megacycle spectrum. The radio is designed to receive frequencies every 50 kc. Therefore, a crystal-controlled oscillator (half of V4) with appropriate signal outputs separated by 50 kc is used to heterodyne the variable i-f signal to a fixed i-f of 500 kc. The second crystal oscillator employs but 20 crystals, thus, it would appear that on a 50-kc basis, only one megacycle would be covered. However, each crystal is used twice, once with the variable i-f 500 kc below the crystal frequency and once with the variable i-f 500 kc above the crystal frequency so that the total of 40 channels is obtained over a two-megacycle portion of the tuning range. Refer to figure 5 for a block diagram that shows the crystal outputs and frequencies involved in one two-megacycle portion of the tuning range of the receiver. Figure 6 shows the complete complement of heterodyning frequencies and resulting signal frequencies.

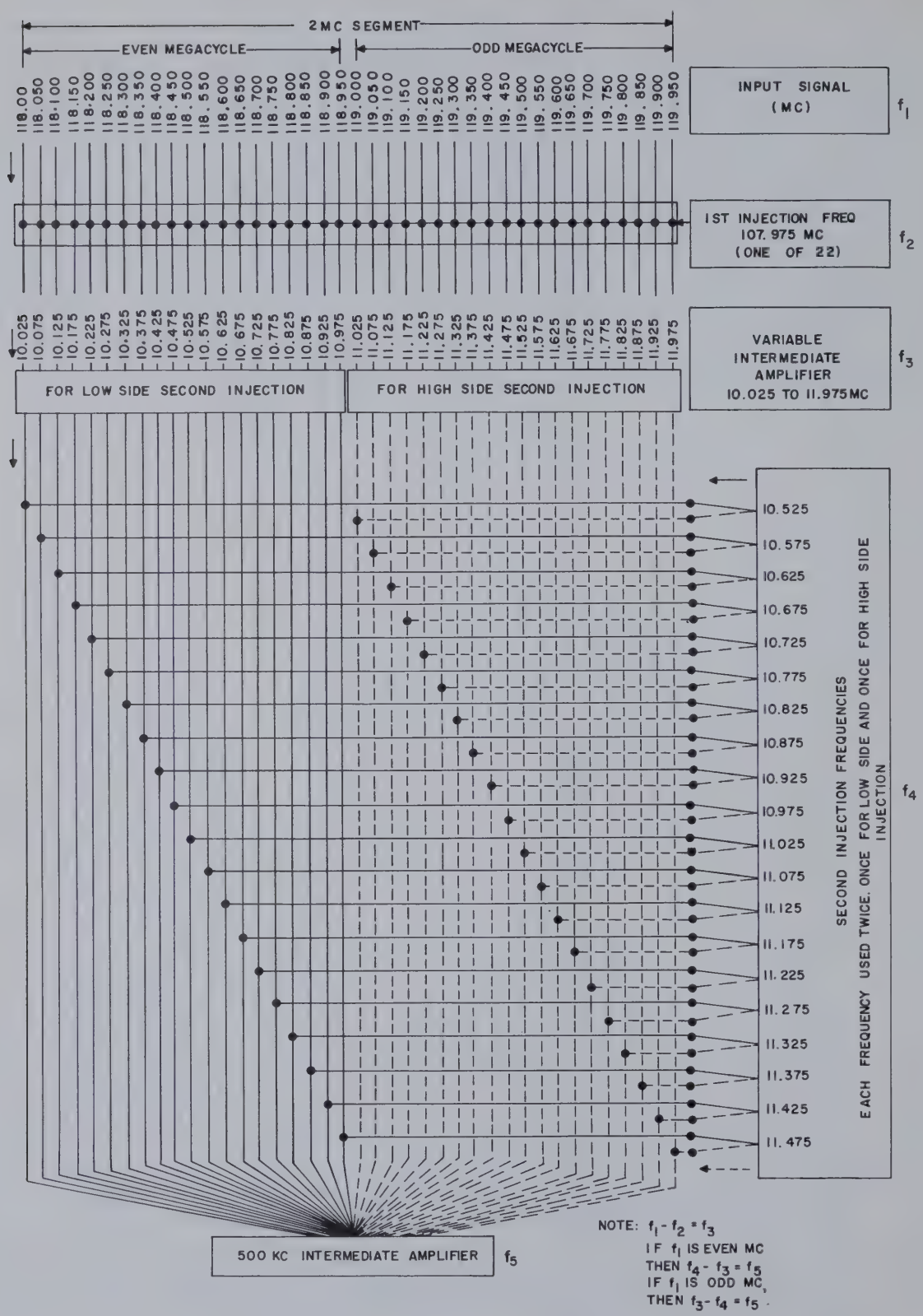

C05 122 4

Circuit Frequencies Employed in the Reception of a 2-MC Portion of the Reception Spectrum, Block Diagram
Figure 5

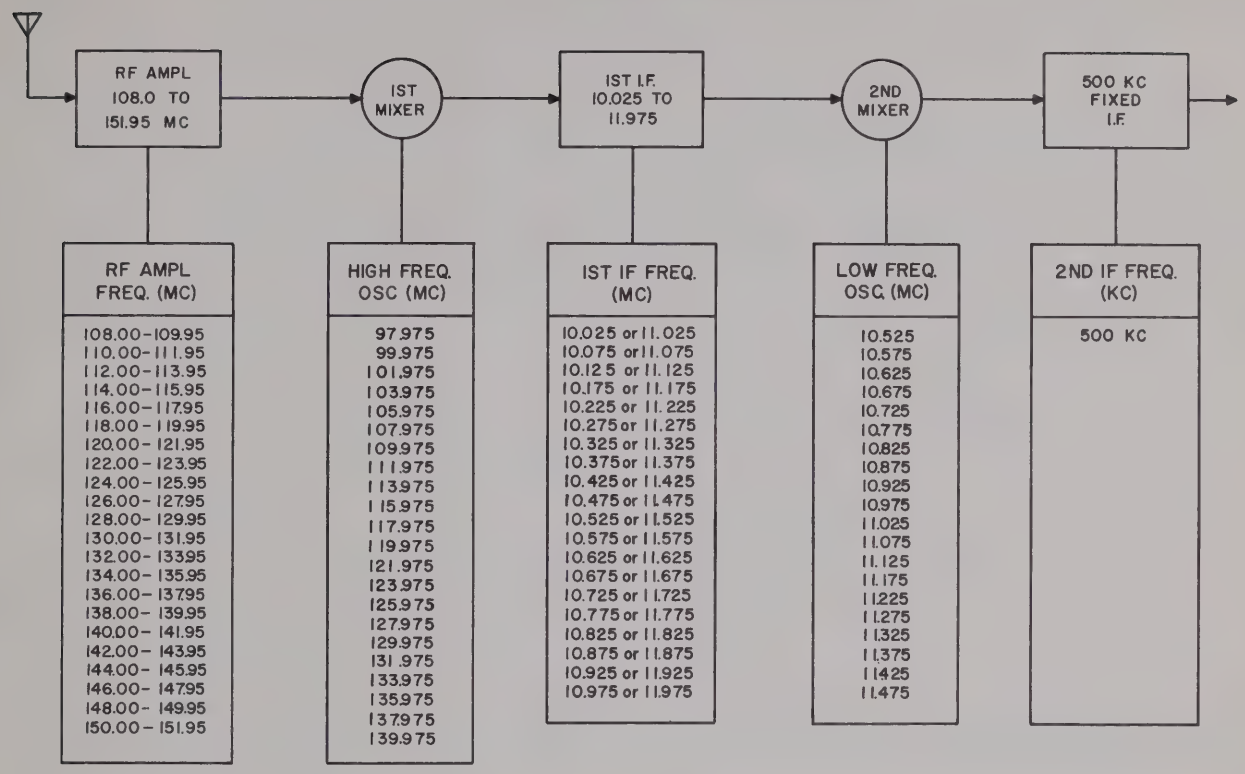

C05 118 3

Over-all Frequency Scheme, Block Diagram
Figure 6

VHF NAVIGATION AND COMMUNICATIONS RECEIVER 51X-2
DISASSEMBLY

1. GENERAL.

The following procedures are recommended for disassembly of Receiver 51X-2 for maintenance or adjustment purposes.

2. REMOVAL OF RECEIVER FROM SHOCKMOUNT AND EXTERIOR CASE.

A. Loosen the two hold-down nuts on the front of the shockmount allowing the nuts to be disengaged.

B. Turn the center extractor nut counterclockwise to disengage receiver from rear connector.

C. Lift receiver up and out of shockmount.

D. Loosen locking screw in the center of the rear of the dust cover case.

E. Hold case and pull receiver out of the case with the front handle.

3. REMOVAL OF MODULES.

The r-f and variable i-f module on top and the i-f and audio module on the bottom of the main chassis may be removed by loosening the captive-type hold-down screws on each module and lifting the modules straight up.

CAUTION: DO NOT TWIST OR PRY ON THE MODULE TO DISENGAGE MATING CONNECTOR, OR DAMAGE TO THE CONNECTOR MAY RESULT.

To remove the 500-kc filter module, the other three modules must be removed first, then the two coaxial connectors must be unfastened. Remove four flathead screws, and lift filter out.

4. REMOVAL OF MODULE COVERS.

To gain access to the components in the r-f and variable i-f section of the r-f and variable i-f module, remove the screws and lock washers of the two covers on the bottom of the module. To gain access to the components in the i-f and audio module, remove the wrap-around cover. To gain access to 500-kc filter components, remove wrap-around cover.

5. REPLACEMENT OF CRYSTALS IN LOW FREQUENCY OSCILLATOR.

This operation may be done with the r-f and variable i-f module removed from the main frame and no further disassembly. Remove the four flathead and two Phillips-head screws mounting the end cover (see figure 101) enclosing dial and crystal switch. Lift out on the bottom edge of the cover and remove. Remove three Truarc rings securing escutcheon plate to the standoffs. Remove dials by loosening collar and sliding dial out of module. Replace crystals as desired using care not to overheat crystals.

6. REPLACEMENT OF CRYSTALS IN VHF OSCILLATOR.

See figure 102. This operation can be done with the module removed from the main frame with no further disassembly. Remove four flathead and two Phillips-head screws mounting the cover enclosing vhf oscillator. See figure 101. Remove cover, top side first, and slide off. Loosen two

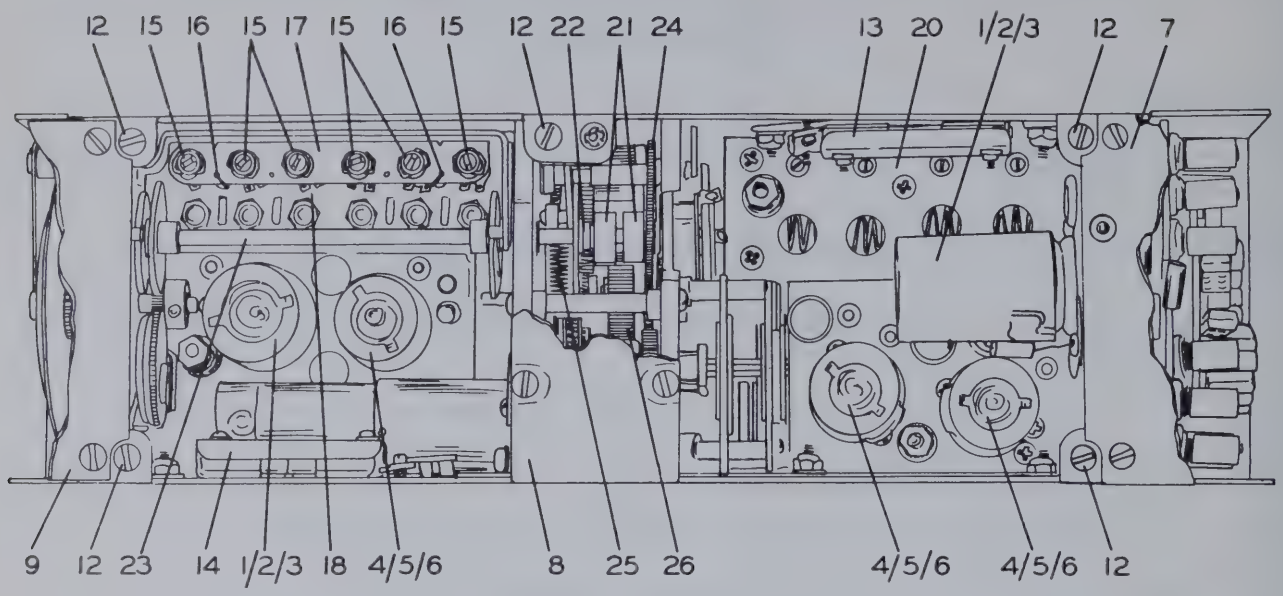

R-F and Variable I-F Module, Top View
Figure 101

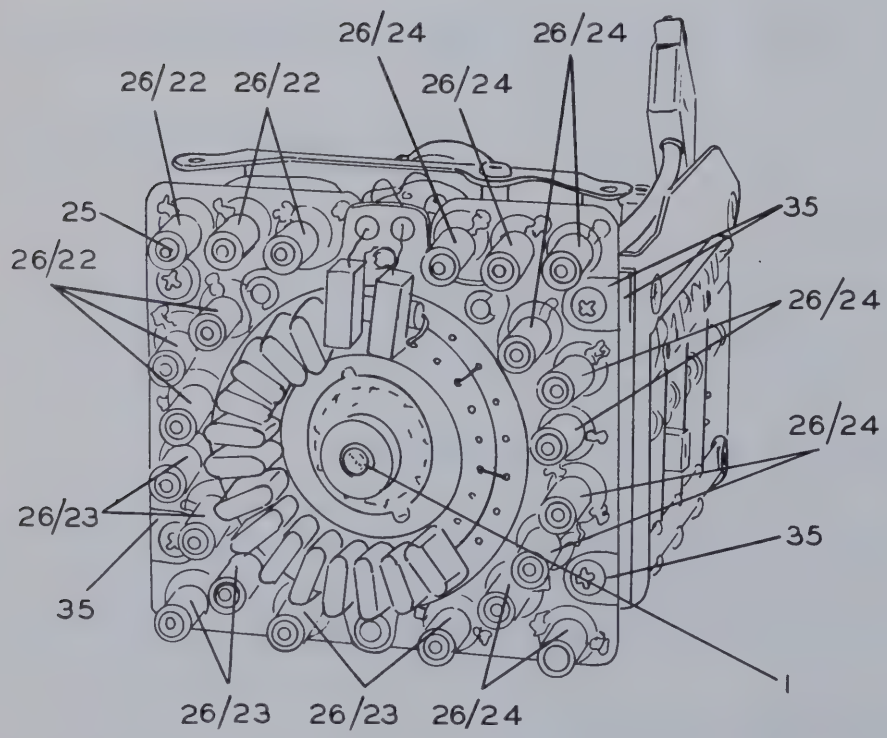

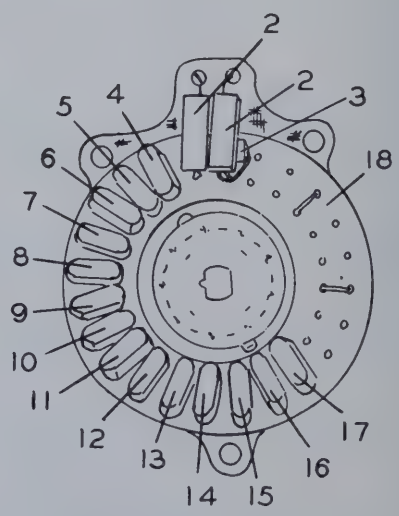

First Injection Oscillator Crystal and Coil Positions
Figure 102

setscrews on the switch drive collar and remove drive collar. Remove three Truarc rings on parts supporting the crystal switch. Unsolder and tag the two wires connected to the crystal board. Lift the crystal unit out. Crystals may be replaced as desired using care not to overheat crystals. Check to see that switch clips have not been misaligned in the replacement procedures. Replace the crystal board making sure that its rotor is aligned correctly with the other switches. If it is desired to complete the crystal complement to obtain use of the frequencies in the range 135.0 to 151.95 mc, eight crystals must be added. Remove the crystal unit as explained above. Remove the two bus wire hold-downs and add the crystals in the correct order. Trim the ends of the crystal leads as required, and make solder connections equivalent to factory-installed units.

8. REMOVAL OF VARIABLE I-F COIL ASSEMBLY. (May be removed from complete module.)

The coils may be removed in banks of three each as follows: Unsolder all leads connecting to each bank of coils. Remove respective loading springs (16) (see figure 101). Remove three coil securing Truarc rings from each bank of coils. Remove three trimmer capacitor mounting nuts and lock washer. Remove screw fastening the banks of coils together to interstage shield. Remove coil bank assembly. Remove two screws, and pull assembly from shield can.

9. REMOVAL OF VHF OSCILLATOR SWITCH ASSEMBLY TO GAIN ACCESS TO OSCILLATOR TUBE SOCKET COMPONENTS. (Can be done in module form.)

Remove cover as explained previously. Remove drive shaft collar as before. Unsolder four wires going from XV5 to the three switchboards (see figure 103 and 104). Unsolder the wires from tuner

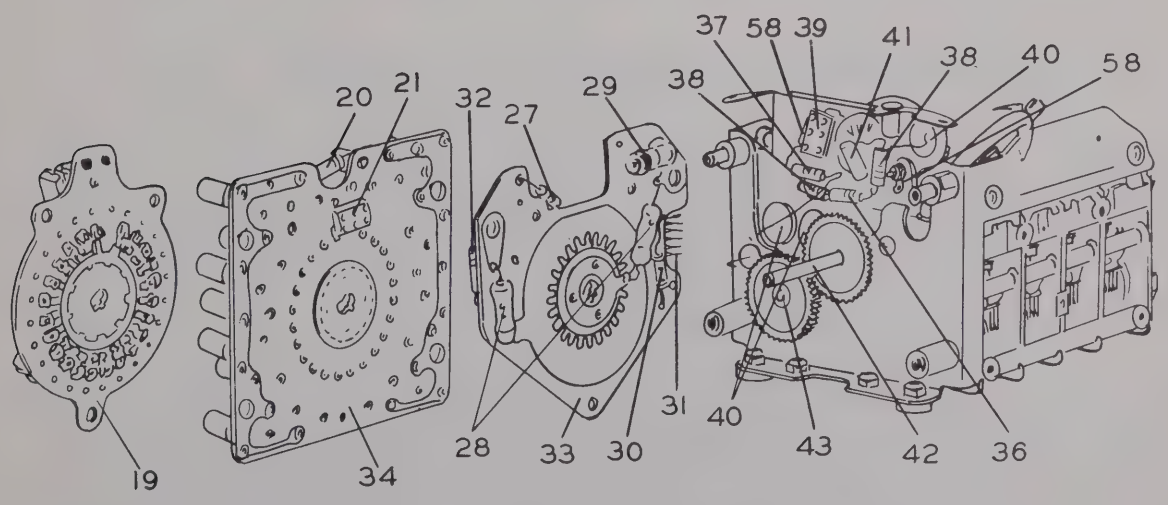

R-F Module, Front Exploded View
Figure 103

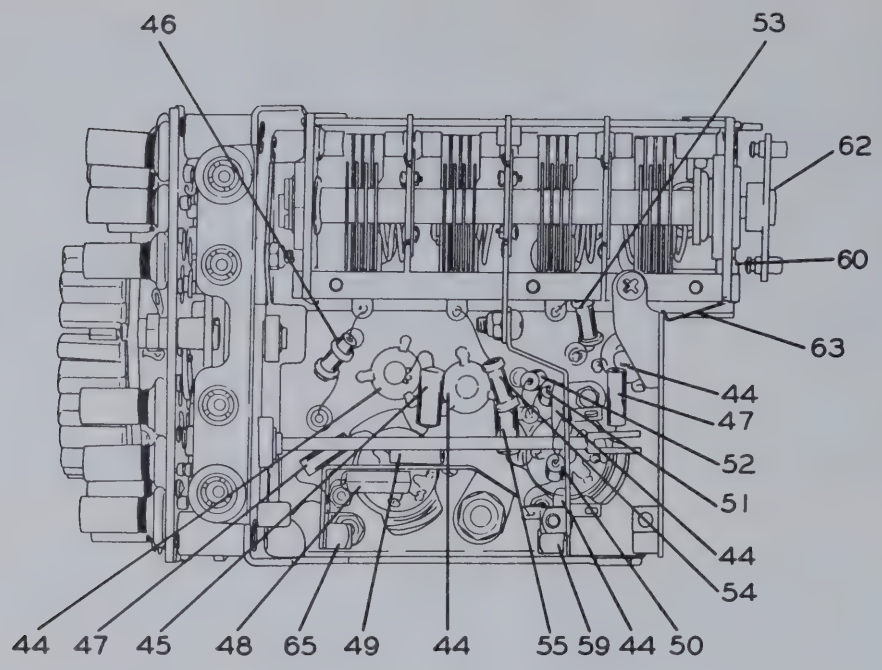

R-F Module, Top View
Figure 104

Z1 (33) to the feedthrough capacitor, C47 (40). Unsolder the wire from the tuner Z1 (33) feeding through TP3 (TP3 access hole). Remove four Phillips-head mounting screws and flatwashers. Lift out assembly of three boards, S2 (34), S3 (19), and Z1 (33) making sure not to lose the ground clips. The three switchboards may be further disassembled if required and, if done, should be reassembled with care to keep proper alignment between rotors and doubled "D" drive shaft holes in order to insure proper torque-free assembly. Note the order of removal of all spacers and washers for correct assembly.

10. REMOVAL OF R-F SUBASSEMBLY FROM VARIABLE I-F MODULE.

See figure 101 and 105. Remove end plate enclosing vhf oscillator. Remove cover enclosing r-f components. Disengage P5 and J5 by removing the screws and cover clamp. Remove two module mounting screws by slipping off the Truarc rings. Disengage two coaxial connectors, P3 and P2. Remove two loading springs on coupler driving four-gang capacitor by lifting off one end of each. Remove seven flathead mounting screws securing r-f subassembly to frame.

11. REMOVAL OF VARIABLE I-F SUBASSEMBLY.

See figure 101 and 106. Remove end plate enclosing l-f oscillator. Disengage J6 and P6 by removing two mounting screws and clamp. Disengage coaxial connector P4. Remove frequency selector cover by removing three mounting screws. Disconnect coaxial connector P3 in r-f subassembly. Remove two module mounting screws by removing Truarc rings, and lift out. Loosen setscrews on 50-kc differential cam collar (21) 50-kc drive shaft gear collar (21), and S6 drive shaft collar (24). Remove bottom cover of variable i-f subunit. Remove six flathead screws securing variable i-f subunit to frame. Remove one Phillips-head screw securing variable i-f subunit to gear plate. Slide the variable i-f subunit out of the frame along with the slug rack drive shaft. Previous to reassembly, pinch split shaft slightly to insure minimum backlash.

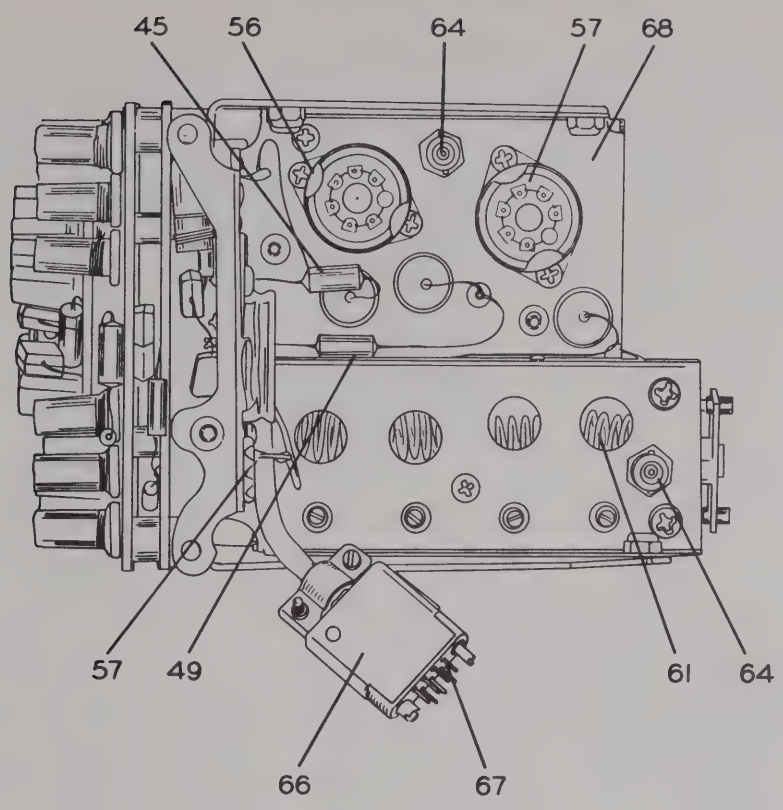

R-F Module, Side View
Figure 105

12. REMOVAL OF FREQUENCY SELECTOR SWITCHES.

A. General.

See figures 101 and 107. The r-f subassembly must be removed from the frame to remove S4 (3), S5 (4), S6 (8), S7 (7), and S9 (6).

B. Removal of Switch S4.

(1) Unsolder the wires connected to the switch S4 (3) wafer and tag to facilitate reassembly.

(2) Remove the two mounting screws (3A).

(3) Remove the switch from the drive shaft.

C. Removal of Switch S5.

(1) Remove the drive collar (5) from drive shaft of S7 (7) and S9 (6).

(2) Remove the two screws (6A).

(3) Remove the two screws (3A).

(4) Lift S4 (3) and S9 (6) off the drive shafts

(5) Unsolder the wires connected to the switch S5 (4) wafer and tag to facilitate reassembly.

(6) Remove S5 (4) from drive shaft.

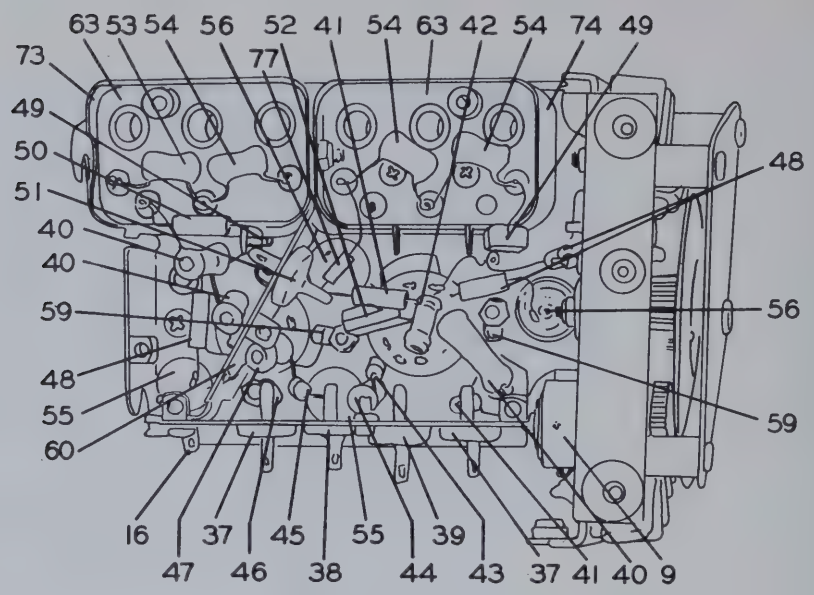

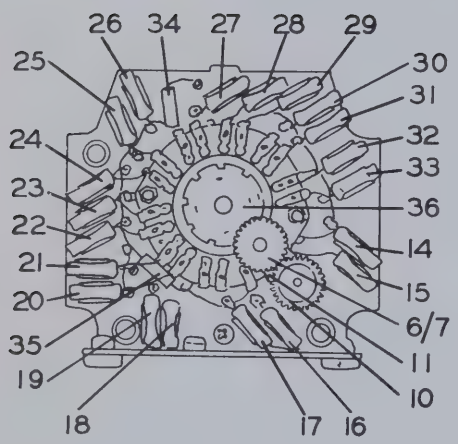

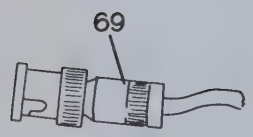

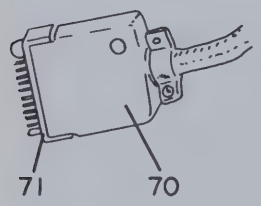

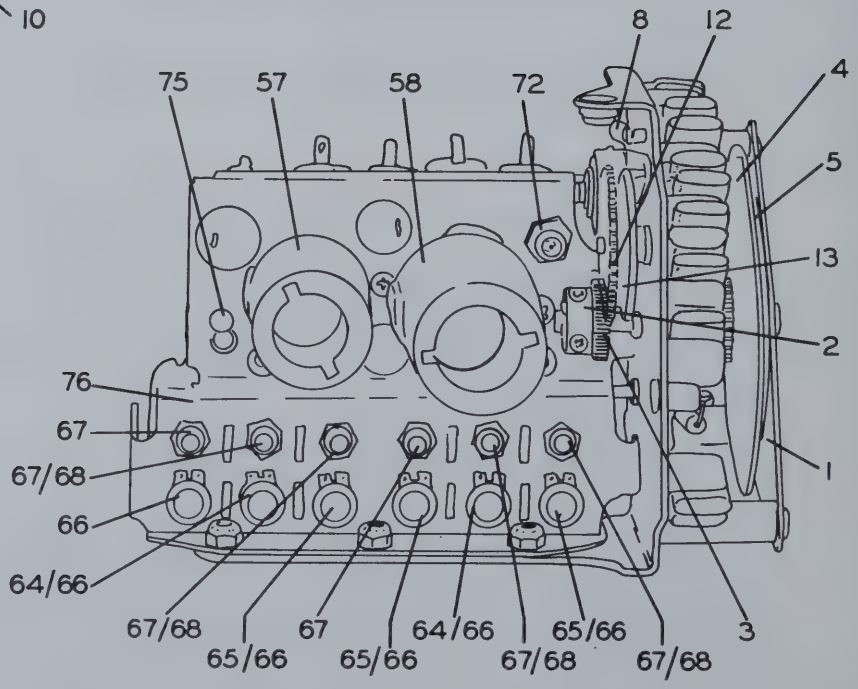

Variable I-F Module
Figure 106

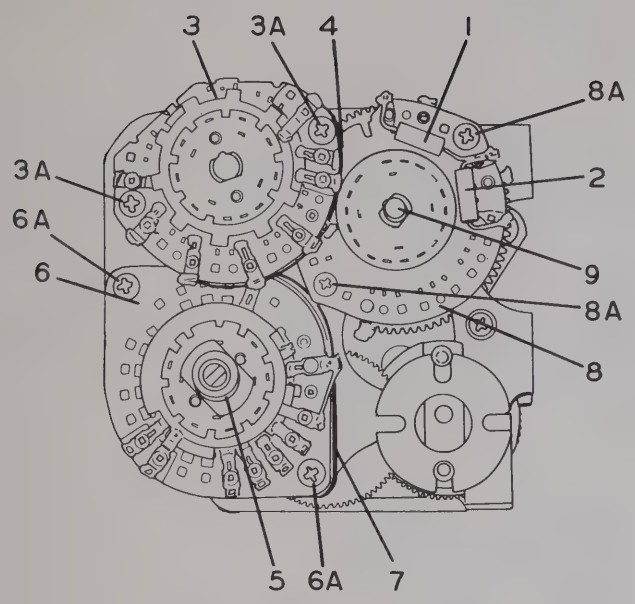

Gear Box, Front View
Figure 107

D. Removal of Switch S6.

(1) Unsolder the wires connected to switch S6 (8) and tag to facilitate reassembly.

(2) Unsolder and remove resistors R25 (1) and R26 (2).

(3) Remove the two mounting screws and spacers (8A).

(4) Remove switch S6 (8) from the drive shaft.

E. Removal of Switch S7.

(1) Remove the two mounting screws (3A).

(2) Remove the drive collar (5).

(3) Remove the two mounting screws (6A).

(4) Lift S4 (3), S5 (4), and S9 (6) out of the way.

(5) Unsolder the wires connected to switch S7 (7) and tag to facilitate reassembly.

(6) Remove the switch (7) from the drive shaft.

F. Removal of Switch S9.

(1) Remove the four switch mounting screws (6A) and (3A).

(2) Remove drive collar (5).

(3) Lift S4 (3) out of the way.

(4) Unsolder the wires connected to switch S9 (6) and tag to facilitate reassembly.

(5) Remove S7 (7) from the drive shaft.

G. Removal of Switch S8.

(1) Remove variable i-f unit assembly.

(2) Unsolder the wires connected to switch S8 (10) and tag to facilitate reassembly.

(3) Remove two Truarc rings securing switch S8 (10).

(4) Remove S8 (10) from drive shaft.

13. REMOVAL AND DISASSEMBLY OF FREQUENCY SELECTOR.

A. General.

The frequency selector may be removed in two manners (see paragraph B and C). Paragraph D presents the proper method for disassembly of the frequency selector (see figures 101, 107, 108, and 109).

B. Removal of Frequency Selector.

The r-f and variable i-f subassembly may be removed first, then the frequency selector package removed as follows:

(1) Remove 12 flathead screws securing selector to module.

(2) Remove two screws securing plug P1 to frame.

(3) Remove module mounting screw and slide out entire assembly.

C. Alternate Method of Removal of Frequency Selector.

(1) Remove end cover over i-f oscillator and the three module mounting screws in the variable i-f subassembly and frequency selector package.

(2) Disconnect connectors J5 and P5.

(3) Disconnect two coaxial connectors P2 and P3 in the r-f subassembly.

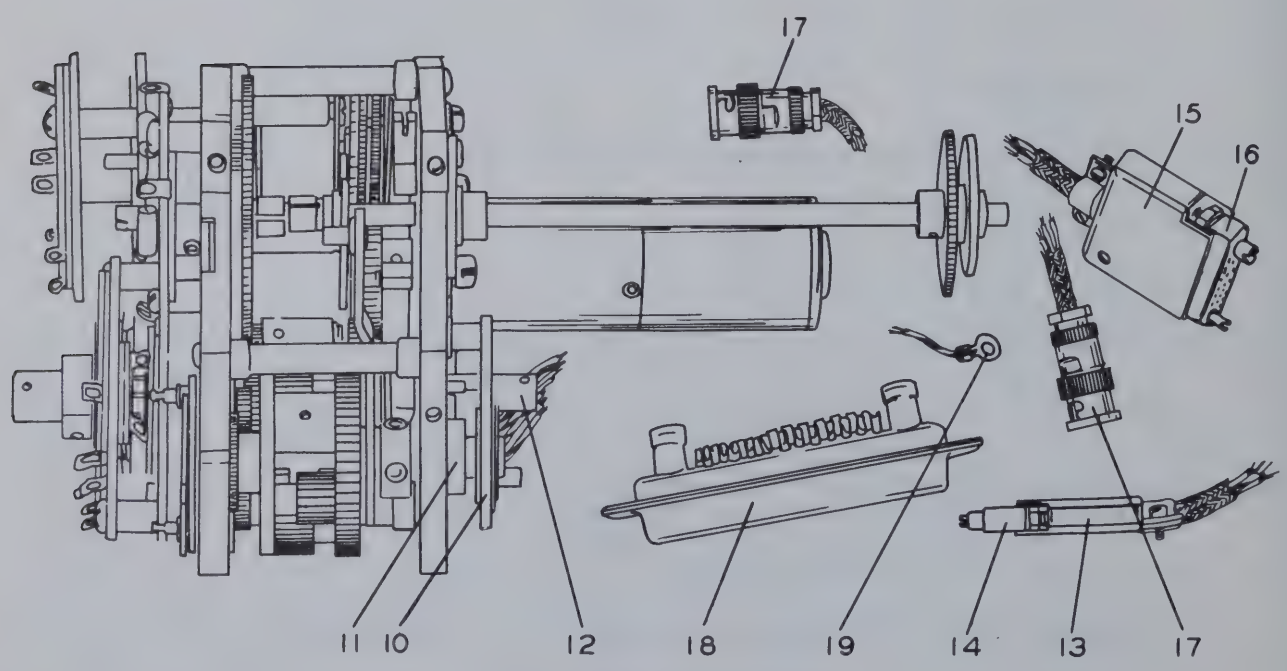

Gear Box, Top View
Figure 108

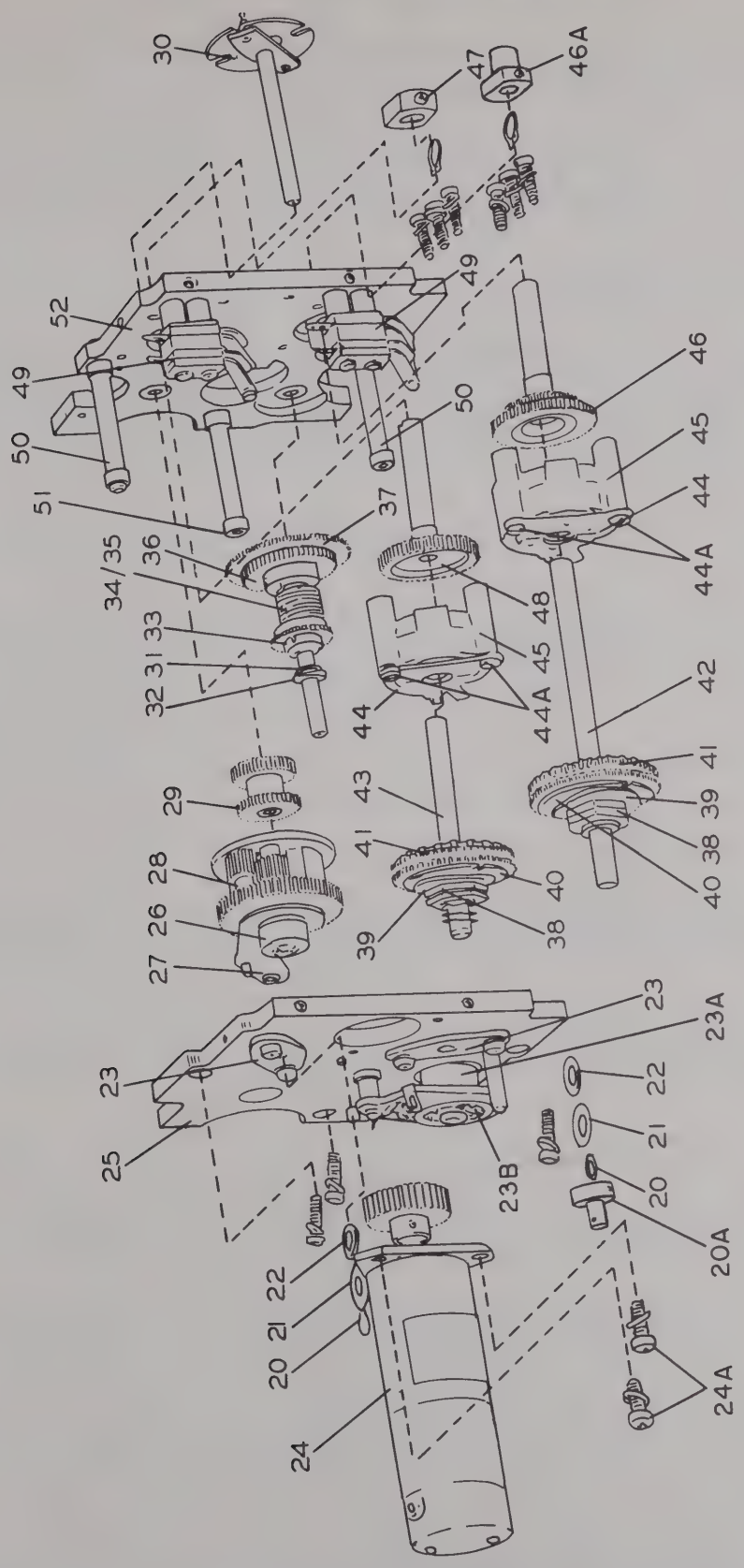

Gear Box, Exploded View
Figure 109

(4) Disconnect connectors P6 and J6 in r-f subassembly.

(5) Remove one end of loading spring from the variable four-gang capacitor drive shaft.

(6) Remove all flathead screws mounting variable i-f and frequency selector package to frame.

(7) Slide out entire package.

D. Disassembly of Frequency Selector.

(1) Remove drive motor B1 (24) mounting screws (24A).

(2) Remove switch S8 (10).

(3) Carefully move cable to gain access to gear plate (25).

(4) Remove screws from ports (50 and 51).

(5) Disengage collar (23A and 20A).

(6) Hardware (20, 21, and 22) must be removed from positigner shafts (42 and 43).

NOTE: Keep shim washers counted so that the exact number removed can be returned and reassembled.

(7) Further disassembly is shown in figure 109.

CAUTION: THE CLUTCH ASSEMBLIES SHOULD IN NO CASE BE DISASSEMBLED FURTHER THAN SHOWN IN FIGURE 109.

VHF NAVIGATION AND COMMUNICATIONS RECEIVER 51X-2
CLEANING

1. GENERAL.

This section contains instructions and procedures for cleaning the 51X-2.

References to the word solvent shall be understood to refer to Stoddard's solvent or equivalent.

WARNING: PERFORM OPERATIONS INVOLVING CLEANING SOLVENT UNDER A VENTILATED HOOD. AVOID BREATHING SOLVENT VAPOR; WEAR A SUITABLE MASK WHEN NECESSARY. AVOID CONTINUOUS CONTACT WITH A SOLVENT. USE GOGGLES, GLOVES, AND APRON TO PREVENT IRRITATION DUE TO PROLONGED CONTACT. CHANGE CLOTHING THAT BECOMES SATURATED WITH SOLVENT.

References to air jet refers to a hand-operated air nozzle supplied with clean dry, compressed air at a pressure of 25 to 28 psi maximum.

WARNING: GOGGLES SHOULD BE WORN WHEN USING AIR JET TO BLOW DUST AND DIRT FROM EQUIPMENT. OTHER PERSONS SHOULD BE WARNED AWAY FROM HAZARDOUS AREA OR WORKING ENCLOSURE.

2. MODULES AND CHASSIS.

Remove dust and dirt from all surfaces, including parts and wiring, with a soft-bristled brush in conjunction with an air jet.

CAUTION: AVOID AIR-BLASTING SMALL COILS, LEADS, AND OTHER DELICATE PARTS BY TOO CLOSE AN APPROACH WITH AIR-JET NOZZLE. USE CAUTION IN BRUSHING THE DELICATE PARTS.

NOTE: When necessary to disturb the dress of wiring and cables, dressing should be noted and when cleaning is finished, wiring and cables should be restored to their proper dress or position.

3. RELAY CONTACTS.

A. Clean dirty (not pitted or burned) contacts using a burnishing tool. Before using tool, clean its surface with alcohol. Do not touch this surface with fingers before using tool.

CAUTION: CONTACT SUPPORTING MEMBERS SHOULD NOT BE BENT OR FORCED BEYOND THEIR NORMAL OPERATING LIMITS WHILE BURNISHING CONTACTS.

B. Remove dust and dirt with soft-bristled brush and air jet. Operate relay armature manually while blowing on contacts.

C. Wash all surfaces of contacts with trichloroethylene applied with a clean camel's-hair brush.

D. Dry contacts with air jet, then remove any whitish film residue by passing small strips of clean white paper back and forth between each pair of contacts while holding them with light finger pressure in their closed position.

4. CONNECTORS.

A. Wipe dust and dirt from bodies, shells, and cable clamps, using solvent-moistened, lintless cloth. Wipe dry with clean, dry, lintless cloth.

B. Remove dust from inserts, using small, soft-bristled brush in conjuncton with air jet.

C. Wash dirt and any traces of lubricant from insert, insulation, and contacts with solvent applied sparingly with a small camel's hair brush.

CAUTION: DO NOT ALLOW SOLVENT TO RUN INTO SLEEVES (OR CONDUIT) COVERING ANY WIRES OR CABLES CONNECTED TO CONTACT TERMINALS OF THE INSERT.

D. Dry the insert with air jet.

5. DIALS AND KNOBS.

Clean all dials and knobs by gently wiping their surfaces with clean, soft, lintless cloth which has been slightly moistened with solvent. When clean, polish with tissue paper.

6. RECEPTACLES.

Clean all receptacles according to applicable steps of procedure used for connectors. Refer to paragraph 4.

7. ROTARY SWITCHES.

Clean all special switches with button contacts and switches of the phenolic-wafer type as follows:

A. Remove all dust with air jet, turning switch rotor back and forth several times while blowing.

B. Wash all contacts and insulation with solvent lightly applied with small camel's hair brush.

C. Dry with air jet, then repeat wash, using clean solvent, and rotating switch rotor several times during this wash.

D. Dry gently but thoroughly with air jet.

8. DUST COVERS.

A. Remove bulk of any surface grease with rags.

B. With air jet, blow dust from surfaces and holes.

C. Immerse in washing bath of solvent, and scrub with wood-backed fiber-bristled brush until clean.

D. Raise from bath and allow solvent to drain into bath.

E. Immerse in rinsing bath of clean solvent, then rinse and raise from bath. Position to drain dry.

F. When thoroughly dry, touch up any damage to finish. Extensive damage to finish may require complete refinishing.

9. SHOCKMOUNTS.

A. With air jet, blow dust from surface.

B. Wipe clean of any grease or remaining dust using a solvent-moistened lintless cloth.

C. Make up a washing bath by dissolving two ounces of detergent powder per gallon of warm water. Immerse mounts, and agitate in bath a few minutes. Raise and drain.

D. Rinse mounts in warm-water bath, drain, and dry with air jet.

VHF NAVIGATION AND COMMUNICATIONS RECEIVER 51X-2
INSPECTION

1. GENERAL.

This section presents instructions and directive procedures designed to determine, by inspection, the condition of the dismantled, disassembled, and cleaned components, subassemblies, assemblies, and parts. Defects resulting from wear, physical damage, deterioration, or other such causes are brought to light by these inspection procedures.

2. COVERS AND SHIELDS.

Inspect covers and shields for deformation, punctures, deep dents, and badly worn surfaces. Also check for damaged fastener devices or handles. Examine them for corrosion and damage to finish requiring work in finishing department.

3. DIALS AND KNOBS.

Inspect all dials and knobs for physical damage and deformation, marred surfaces, and impairment of markings.

4. VIBRATION MOUNTS.

A. Inspect metal parts for corrosion, damaged surface, and deformation.

B. Inspect the elastic members for deep cracks or other physical damage.

C. Inspect elastic members for loss of resiliency by distorting manually and noting return to normal position upon release. Sluggish return or failure to return completely to normal position indicates a defective mount.

5. GEARS, METAL OR FIBER.

NOTE: Wear of gear bore and teeth, except in instances where it is sufficiently severe to be apparent on visual inspection is best determined by guage measurement. Presence of a sharp burr on one side of gear at edges of teeth is an indication of wear of teeth.

A. Inspect all gears for broken, chipped, or badly worn teeth.

B. Inspect gear bodies for cracks and deformation.

C. Inspect bore of gear for excessive wear.

D. Inspect surfaces for corrosion or other abnormal condition.

CAUTION: DO NOT DISASSEMBLE CLUTCH OR CONTAMINATE IN ANY MANNER.

6. R-F COILS.

Inspect r-f coils for broken leads, loose, poorly soldered, or broken terminal connections, and loose mountings. Also check for crushed, scratched, cut, bruised, or charred windings, for corrosion on windings, leads, terminals, and connections, and for physical damage to forms and tuning-slug adjustment screws.

7. CONNECTORS.

A. Inspect connector body for broken parts, deformed shell, clamp, and other abnormal conditions, depending upon its type.

B. Inspect connector for cracked, broken insulation, and for contacts which are broken, deformed, or out of alignment. Check also for corroded or damaged plating on contacts, and for loose, poorly soldered, broken, or corroded terminal connections.

8. INSULATORS, CERAMIC OR MYCALEX.

Inspect these insulators for cracked, chipped, or broken ceramic or mycalex. Also check for signs of burning, looseness, and other abnormal conditions.

9. JACKS.

Inspect all jacks for corrosion, rust, loose, or broken parts, cracked insulation, poor contacts, and other abnormal conditions.

10. TRANSFORMER AND REACTORS.

Check these parts for signs of excessive heating, physical damage to case, cracked or broken ceramic insulators, and other abnormal conditions. Also check for corroded, poorly soldered, or loose terminals, and loose, broken, or missing mounting hardware.

11. WIRING.

Inspect open and laced wiring of chassis, terminal boards, and parts of equipment by checking insulation for physical damage and charring, and check wires for breakage and for improper dress in relation to adjacent wiring or chassis.

12. RECEPTACLES.

Inspect receptacles for cracked, broken, or charred insulation. Also check for physical damage to all parts, loose or bent contacts, damage to contact plating, corrosion, and other abnormal conditions.

13. RELAYS.

A. Inspect relay contacts for burned or pitted areas, welds, misalignment, and improper separation.

B. Check contact support members for deformation causing contact misalignment or improper contact operation.

C. With the finger, test movable contacts for sluggish action or sticking at any point of travel in either direction. Examine for physical damage to armature. Also check for foreign matter between end of pole piece and armature.

D. Inspect for loose coil, corrosion, loose leads or terminals, and for cuts and damage to coil.

E. Inspect for loose, broken, brittle, or charred insulation on coil or leads, between contact-support members, and between terminals on relay.

F. Inspect for bent, loose, or broken terminals.

G. Check relay mountings and mechanical parts for looseness and physical damage or corrosion.

14. FIXED COMPOSITION RESISTORS.

Inspect these resistors for cracked, broken, blistered, or charred bodies, and loose, broken, poorly soldered, or corroded terminal connections.

15. FIXED WIRE-WOUND RESISTORS.

Inspect these resistors for signs of heating; cracked, broken, or charred insulation; loose, poorly soldered, broken, or corroded terminal connections and loose mountings.

16. VARIABLE RESISTORS.

Inspect variable resistors for corrosion of shafts, cases, and other visible parts, loose mountings, and physical damage. Rotate the shaft to determine whether action is too rough, too loose, or too tight.

17. TUBE SOCKETS.

Tube sockets are inspected as follows:

A. Inspect for loose, broken, missing, or improperly seated mounting rings. Also check for cracked, broken, or charred insulation.

B. Inspect for broken, deformed, or corroded contacts, and loose, poorly soldered, broken, or corroded terminal connections.

18. SOLDERED TERMINAL CONNECTIONS.

A. Inspect for cold-soldered or "rosin" joints. These joints present a porous or dull, rough appearance. Check for strength of bond with the point of a tool.

B. Examine for excess solder, protrusions from the joint, pieces adhering to adjacent insulation, and particles lodged between joints, conductors, or other parts.

C. Inspect for insufficient solder and unsoldered strands of wire protruding from conductor at joint. Also look for insulation that is stripped back too far from joint, or badly frayed at joint.

D. Inspect for corrosion (verdigris) on copper conductor at joint.

19. ROTARY SWITCHES.

A. Inspect insulation for cracks or breakage and for charring.

B. Check movable and stationary contacts for deformation, breakage, and wear, and for burning, pitting, and corrosion.

C. Inspect terminals for loose, poorly soldered, broken, or corroded connections.

D. Examine mechanical parts for damage or corrosion, and for irregular or rough action.

E. If applicable, examine switch for proper detent action.

VHF NAVIGATION AND COMMUNICATIONS RECEIVER 51X-2 ASSEMBLY

1. GENERAL.

The following procedures are recommended for assembly of VHF Navigation and Communications Receiver 51X-2 for maintenance or adjustment purposes.

2. ASSEMBLY OF FREQUENCY SELECTOR.

A. Position the two armatures (44) and secure with special screw (44A). See figure 109. Make sure screws are seated fully. Use Glyptal lock on threads of the two screws. Check for free action of hinge plate.

B. Replacement of solenoid assemblies (45) is shown in figure 109.

C. Replace gear plate and secure to post (50) and (51).

D. Replace Truarc rings and washers (20), (21), and (22).

E. Reposition collar (20A) and (46A) on shafts.

F. Replace switch S8 (10), and drive motor B1 (24).

G. Slide entire package into frame, and secure module mounting screws.

H. Replace 12 flathead screws securing selector to frame.

I. Replace the r-f and variable i-f subassembly.

J. Insure that all screws are tightened. Relubricate according to paragraph 14, but in no case lubricate clutches or contaminate them in any manner. Make sure no wires are pinched. Check mechanical alignment according to figure 702. Make sure that collars driving switches and cams do not limit end play of shafts (43), (42), (37), and (30). Reassemble frequency selector package and variable i-f and r-f subassemblies into frame. Synchronize switches according to figure 702.

3. REPLACEMENT OF FREQUENCY SELECTOR SWITCHES.

A. General.

See figures 101 and 107. The r-f subassembly must be replaced on the frame for replacement of switches S4 (3), S5 (4), S6 (8), S7 (7), and S9 (6).

B. Replacement of Switch S4.

(1) Replace switch wafer S4 (3) on the drive shaft.

(2) Replace the two mounting screws (3A).

(3) Solder the previously removed wires to the appropriate terminals.

C. Replacement of Switch S5.

(1) Position switch S5 (4) on the drive shaft.

(2) Solder the wires, that were previously removed, to the appropriate terminal.

(3) Replace S4 (3) and S9 (6) on the correct drive shafts.

(4) Replace the four mounting screws (3A) and (6A).

(5) Replace the drive collar (5) on the drive shaft of S7 (7) and S9 (6).

D. Replacement of S6.

(1) Replace switch S6 (8) on the drive shaft.

(2) Replace the mounting screws and spacers (8A).

(3) Solder resistors R25 (1) and R26 (2) to the appropriate terminals.

(4) Solder the wires previously removed to the appropriate terminals.

E. Replacement of S7.

(1) Position S7 (7) on the drive shaft.

(2) Solder the wires previously removed to the appropriate lug.

(3) Replace switches S4 (3), S5 (4), and S9 (6) on the drive shafts.

(4) Replace mounting hardware (6A) and (3A).

(5) Replace drive collar (5).

F. Replacement of S9.

(1) Replace S7 (7) on the drive shaft.

(2) Solder the wires previously removed from switch S7.

(3) Replace switch S4 (3).

(4) Replace drive collar (5).

(5) Replace four mounting screws (6A) and (3A).

G. Replacement of Switch S8.

(1) Reposition S8 (10) on drive shaft.

(2) Replace two Truarc securing rings.

(3) Solder the wires previously removed from S8.

(4) Replace variable i-f unit assembly.

4. REPLACEMENT OF VARIABLE I-F SUBASSEMBLY.

A. Insert slug rack drive shaft along with the variable i-f subassembly into the frame (see figure 101). Secure the variable i-f subassembly to the gear plank with Phillips-head screw.

B. Secure the variable i-f subassembly to frame with six flathead screws.

C. Replace bottom cover of variable i-f subassembly.

D. Check for proper end play in 50 KC drive shaft (23), switch alignment, cam alignment, and dial indication before tightening setscrews in collar. Make sure setscrews do not fall in slots of hubs, the differential cam spring is in location, and the collar does not limit end play.

E. Tighten setscrews on S6 (8) drive shaft collar, 50-KC drive shaft gear collar and the 50-KC differential cam collar.

F. Insert r-f subassembly Truarc rings and secure with two module mounting screws.

G. Connect coaxial connector P3 in r-f subassembly.

H. Replace frequency selector cover and secure with three mounting screws.

I. Engage coaxial connector P4.

J. Engage J6 and P6 and secure with two mounting screws and clamps.

K. Replace end plate enclosing i-f oscillator.

5. REPLACEMENT OF R-F SUBASSEMBLY ON R-F AND VARIABLE I-F MODULE.

A. Insert r-f subassembly in frame (see figures 101, 104, and 105). Secure r-f subassembly to frame with seven flathead mounting screws.

B. Replace two loading springs on the coupler that drives the four-gang capacitor.

C. Check the four-gang capacitor position to insure that it is the same as when disassembled.

D. Engage two coaxial connectors, P3 and P2.

E. Replace two module mounting screws by slipping on the two Truarc rings.

F. Check rotor alignment of vhf oscillator stack for conformance to frequency indicated by dials.

G. Engage P5 and J5. Secure with screws and cover clamps.

H. Replace cover enclosing r-f components.

I. Replace end plate enclosing vhf oscillator.

6. REPLACEMENT OF VHF OSCILLATOR SWITCH ASSEMBLY.

A. Replace assembly of three boards S2 (34), S3 (19), and Z1 (33).

B. Replace four Phillips-head mounting screws and flat washers.

C. Solder the wire from the tuner Z1 feeding through TP3 (TP3 access hole).

D. Solder the wires, as tagged, from tuner Z1 to the feed through capacitor C47.

E. Solder the four wires, as tagged from XV5 to the three switchboards.

F. Replace drive shaft collar as directed in paragraph 9. Make sure rotors line up at correct alignment point.

G. Replace cover as directed in paragraph 11.

7. REPLACEMENT OF VARIABLE I-F COIL ASSEMBLY.

A. Push assembly into shield can. Secure with two screws.

B. Replace coil bank assembly.

C. Replace screws fastening the banks of coils together in interstage shield.

D. Replace the three trimmer capacitor mounting nuts and lock washers.

E. Replace the three coil securing Truarc rings to each bank of coils.

F. Replace respective loading spring MP1 or MP2.

G. Solder all leads connecting each bank of coils, as tagged.

8. REPLACEMENT OF TUNING MOTOR B1.

A. Replace motor by tipping motor in and down. Make sure that motor drive gear is not forced into two clutch drive gears in mechanism.

B. Replace the motor terminal cap if its removal was necessary for disassembly.

C. Replace three motor mounting screws on motor mounting flange.

D. Engage coaxial connector P4.

E. Engage J6 and P6. Secure with two mounting screws and cover clamp.

9. ASSEMBLY OF VHF OSCILLATOR AFTER REPLACEMENT OF CRYSTALS.

A. Replace bus wire hold-downs.

B. Replace the crystal board making sure that its rotor is aligned correctly with the other switches.

C. Replace the crystal unit.

D. Solder the two tagged wires connected to the crystal board.

E. Replace three Truarc rings on parts supporting the crystal switch.

F. Replace drive collar, and tighten two setscrews on the switch drive collar.

G. Replace cover and slide on, bottomside first. Secure the cover enclosing the uhf oscillator with four flathead and two Phillips-head screws.

10. ASSEMBLY OF LOW FREQUENCY OSCILLATOR AFTER REPLACEMENT OF CRYSTALS.

A. Slide dial on module.

B. See that proper switch position is picked on dial shaft insertion and that proper dial synchronization is maintained before tightening drive collar.

C. Replace three Truarc rings securing escutcheon plate to standoffs.

D. Replace cover.

E. Replace the four flathead and two Phillips-head screws mounting the end cover enclosing dial and crystal switch.

11. REPLACEMENT OF MODULE COVERS.

A. Replace wrap-around cover that was removed to gain access to 500-kc filter components.

B. Replace wrap-around cover that was removed to gain access to the components in the i-f and audio module.

C. Replace the screws and lock washers of the two covers on the bottom of the module, which was removed to gain access to the components in the i-f and variable i-f selection of the r-f variable i-f module.

12. REPLACEMENT OF MODULE.

A. Replace filter, and secure with four flathead screws.

B. Fasten the two coaxial connectors.

C. Replace the r-f and variable i-f and audio module on the bottom of the main chassis.

CAUTION: DO NOT TWIST OR PRY ON THE MODULE TO ENGAGE MATING CONNECTORS, OR DAMAGE TO THE CONNECTORS MAY RESULT.

D. Replace and secure the captive-type hold-down screws on each module.

13. REPLACEMENT OF RECEIVER IN EXTERIOR CASE AND ON SHOCKMOUNT.

A. Hold case, and push receiver into case with front handle.

B. Tighten locking screw in the center of the rear of the dust cover case.

C. Place receiver in and down on shockmount. Make certain of correct alignment with connector in rear of shockmount.

D. Turn the center extractor nut clockwise to engage receiver with rear connector.

E. Engage and tighten the two hold-down nuts on the front of the shockmount.

14. LUBRICATION.

The r-f module is the only module requiring lubrication. Some parts are lubricated for the life of the unit, and some parts must not be lubricated.

A. Recommended Lubricants.

Use the lubricants, or their equivalents, as specified in table 501.

TABLE 501. RECOMMENDED LUBRICANTS

LUB.	COLLINS PART NO.	A/N NO.	TYPE
A	005 0116 00	AN-06	Oil
B	005 0010 00	--	Lubriplate No. 105 Fiske Bros.
C	005 0334 00	--	Lubricant - dry

B. Parts To Be Lubricated.

Listed in table 502 are the surfaces of the 51X-2 requiring lubrication.

TABLE 502. LUBRICATION POINTS

PARTS LUBRICATED AT INTERVALS OF 10,000 TUNING CYCLES	LUBRICANT	QUANTITY
Working surfaces of the cams	C	Thin film
Tuning table guide slots	C	Thin film
Bores of gears that idle on shafts (except those mentioned in paragraph C. (1).)	A	One drop
Porous bronze bearings	A	One drop
PARTS LUBRICATED AT INTERVALS OF 25,000 TUNING CYCLES		
S1 through S9	B	Thin film on rotor contact paths. Avoid excess.

NOTES

Access to lubrication points may be gained by the removal of covers; further disassembly is unnecessary.
If any item requiring lubrication is disassembled, it should be relubricated upon reassembly.

C. Parts Not Requiring Lubrication.

Parts that do not require lubrication during the life of the unit are as follows:

(1) Tuning motor, tuning capacitor, and bore of the clutch gears. These have been lubricated for the life of the unit.

(2) All gear teeth.

CAUTION: THE AUTOPOSITIONER CLUTCH WORKING SURFACES AND THE CLUTCH GEAR TEETH MUST NOT BE LUBRICATED AND MUST BE KEPT FREE OF ALL FOREIGN CONTAMINANTS (GREASE, OIL, DIRT, ETC.) AT ALL TIMES.

VHF NAVIGATION AND COMMUNICATIONS RECEIVER 51X-2
TESTING

1. SERVICING AND TESTING TRANSISTOR CIRCUITS.

A. General.

Servicing procedures and test equipments that have been used in the past with other types of electronic equipment, for the most part, may be used with transistor circuits. Some special precautions which must be used are listed below. If the equipment under test contains transistors, even though they may not be in the circuits under test, the precautions should be observed because of the possibility of accidentally contacting a transistor circuit.

B. Test Equipment.

Damage to transistors by test equipment usually is the result of accidentally applying too much current or voltage to the transistor elements. Common causes of damage from test equipment are as follows.

(1) Transformerless Power Supplies.

Test equipment with transformerless power supply is one source of such current. This type of test equipment can be used by employing an isolation transformer in the power line.

(2) Line Filter.

It is still possible to damage transistors from line current, even though the test equipment has a power transformer in the power supply, if the test equipment is equipped with a line filter. This filter may act like a voltage divider and apply 55 volts a-c to the transistor. To eliminate trouble from this situation, connect a ground wire from the chassis of the test equipment to the chassis of the equipment under test before making any other connections.

(3) Low Sensitivity Multimeters.

Another cause of transistor damage is a multimeter that requires excessive current for adequate indications. Multimeters that have sensitivities of less than 5000 ohms per volt should not be used. A multimeter with lower sensitivity will draw too much current through many types of transistors and damage them. Use of 20,000-ohms-per-volt meters or vacuum-tube volt-meters is recommended. Check the ohmmeter circuits (even those in vtvms) on all scales with an external, low resistance milliammeter in series with the ohmmeter leads. If the ohmmeter draws more than one milliampere on any range, this range cannot be used safely on small transistors.

(4) Power Supply.

Always use fresh batteries of the proper value for the equipment under test in test power supplies. Never use battry eliminators because the regulation of these devices is poor at the current values drawn by transistor circuits. Be certain about identification of polarity before attaching the battery to the equipment under test; polarity reversal may damage the transistor.

C. Electrical Soldering Irons.

The following are possible causes of transistor damage from soldering irons.

(1) Leakage Current.

Electric soldering irons may damage transistors through leakage current. To check a soldering iron for leakage current, connect an a-c voltmeter between the tip of the iron and a ground connection (water pipe or line ground), allow the iron to heat, then check for a-c voltage with the meter. Reverse the plug in the a-c receptacle, and again check for voltage. If there is any indication on the meter, isolate the iron from the a-c line with a transformer. The iron may be used without the isolation transformer if the iron is plugged in and brought to temperature then unplugged for the soldering operation. It also is possible to use a ground wire between the tip of the iron and the chassis of the equipment being repaired to prevent damage from leakage current.

(2) Iron Size.

Light duty soldering irons of 20 to 25 watts capacity are adequate for transistor work and should be used. If it is necessary to use a heavier duty iron, wrap a piece of number 10 copper wire around the tip of the iron, and make it extend beyond the tip of the iron. Tin the end of the piece of copper wire, and use it as the soldering tip.

D. Servicing Practices.

(1) Heat-Sink When Soldering.

When installing or removing a soldered-in transistor, grasp the lead to which heat is being applied, between the solder joint and the transistor, with long-nosed pliers to bleed off some of the heat that conducts into the transistor from the soldering iron. Make sure that the wires that are being soldered to transistor terminals are pretinned properly so that the connection can be made quickly. Excessive heat will permanently damage a transistor.

(2) Removal of Transistors From Operation Circuits.

Never remove or replace a plug-in transistor when the supply voltage is turned on. Transients thus produced may damage the transistor or others remaining in the circuit. If a transistor is to be evaluated in an external test circuit, be sure that no more voltage is applied to the transistor than normally is used in the circuit from which it came.

(3) Plug-in Transistors.

When servicing equipment that uses plug-in transistors, it is good practice to remove the transistors from their sockets and reinsert them to break down any film of corrosion or dirt that may have formed.

(4) Resistance Measurements in Transistor Circuits.

See figure 701. When measuring resistance of circuits containing transistors or mineral diodes, remember that these components are polarity and voltage conscious therefore, follow the directions of the notes that are given on the resistance tables or drawings to be sure that the correct polarity and range is applied to the circuit from the ohmmeter.

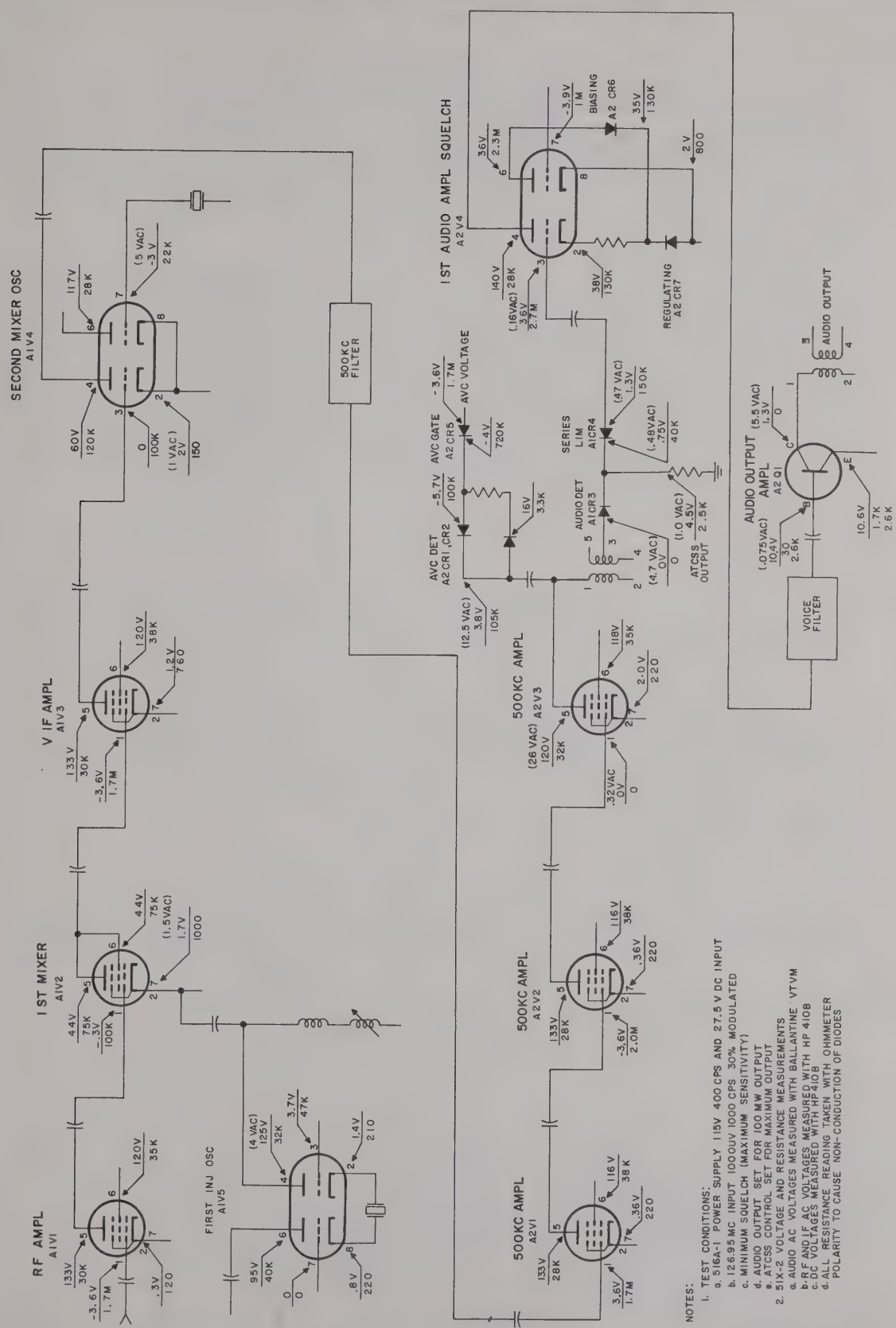

Receiver 51X-2, Resistance and Voltage Measurements
Figure 701

C05 137 4

Usually, any capacitors used in transistor circuits are of large values (especially in audio, servo, or power circuits), and it takes time to charge these capacitors when an ohmmeter is connected to a circuit in which they appear. Any reading obtained is subject to error if the capacitor is not allowed time to charge fully. In some cases, it may be best to isolate the components in question and to measure them individually.

(5) Power Transistor Heat-Sinks.

In some cases, power transistors are mounted on heat-sinks that are designed to carry heat away from them. In some power circuits, the transistor also must be insulated from ground. This insulating is done by means of insulating washers made of fiber and mica. When replacing transistors mounted in this manner, be sure that the insulating washers are replaced in proper order. Before installing the mica washers, treat them with a film of silicone fluid, Collins part number 005 0273 00, or equivalent. This treatment helps in the transfer of heat. After the transistor is mounted and before making any connections to it, check from the case to ground with an ohmmeter to see that the insulation is effective.

(6) Test Prods.

Test prods should be clean and sharp. Because many of the resistors used in transistorized equipments have low values, any additional resistance produced by a dirty test prod will make a good resistor appear to be out of tolerance.

In miniaturized equipment, the clearance between socket terminals, wires, and other components usually is very small. It is good practice to cover all of the exposed tip of the test prod, except about one-eighth inch, with plastic tape or other insulation.

2. PERFORMANCE TEST OF RECEIVER 51X-2.

A. General.

The following tests assume a receiver that has been properly aligned and, so far as known, is in good condition. It must be realized that the data supplied cannot be duplicated in the following tests because of tolerances in test equipment and variations in procedure.

B. Test Equipment Required.

The following test equipment, or equivalent, is required:

(1) Shield room.

(2) 28-v d-c power supply.

(3) 115-v, 400-cps power supply.

(4) Hewlett-Packard 608D Signal Generator.

(5) Audio load and output meter.

(6) Control panel.

(7) Hewlett-Packard 330C Distortion Analyzer.

(8) Hewlett-Packard 200AB Audio Oscillator.

(9) Hewlett-Packard 410B VTVM.

(10) D-c vtvm.

(11) Oscilloscope.

(12) Collins Receiver 51J.

(13) A-c wattmeter, 50 w.

(14) D-c ammeter, 5 amp.

(15) Hewlett-Packard 400C VTVM.

(16) Boonton 211A Signal Generator.

C. Nonoperational Check.

(1) Measure the resistance from the following rear pins to ground with an ohmmeter. Resistances should be approximately as specified.

TABLE 701 RESISTANCE MEASUREMENTS FOR PLUG 1 OF MAIN FRAME MODULE

PIN NO	RESISTANCE	
	D-C SUPPLY	A-C SUPPLY
2	12 ohms	2000 ohms
28	infinite	22 ohms
23	280 ohms	280 ohms
4	infinite	infinite
5	infinite	infinite

(2) Measure the resistance from the + terminal of C2 of the main frame to ground. This resistance should be approximately 15K ohms.

D. Operational Check.

(1) Apply power to receiver, checking for dark or overly bright filaments. Note that a-c power requirement is about 25 watts, and d-c current (when using a-c supply) is less than 0.1 ampere except during channeling when it may rise to about 2.2 amperes. With d-c power supply, note that d-c current drain is about 1.1 amperes rising to approximately 3.3 amperes when channeling.

(2) Check that the pawl enters the stop wheel at each 50-kilocycle and each megacycle channel. The muting switch should open when the pawl enters the stop wheel and close when the motor is running.

(3) Check that top leads of capacitors C13 and C15 of the i-f and audio module are grounded from 108.0 mc to 117.95 mc.

(4) Check that 27.5 v exists on pin 19 of P1 of the main frame from 118.0 to 151.95 mc.

E. Sensitivity Test Requirements.

(1) Adjust the receiver frequency to 108.00 mc, and connect the Hewlett-Packard 608D Signal Generator to the receiver antenna input through a 6-db matching pad. Set SQUELCH control for maximum gain.

(2) Set the signal generator output to 3 uv, and adjust the generator frequency to give an i-f frequency of 500 kc as indicated by a 51J loosely coupled to A2V3. If a 51J receiver is not available, tune the signal generator for maximum agc voltage at TP5 on the i-f and audio module using a vtvm.

(3) Adjust the signal generator for 30% modulation at 100 cps.

(4) Connect a 500-ohm audio load to the audio output terminals, and adjust the AURAL LEVEL control (R18) for 100-mw output.

(5) Remove the 1000-cps modulation, and note the audio output level. Record the decibel drop in audio level as the (S+N)/N ratio.

(6) Record the squelch threshold in microvolts.

(7) Repeat steps (1) through (6) for each of the following frequencies: 109.0, 112.1, 115.2, 118.4, 121.45, 124.5, 127.55, 130.6, 134.65, 137.7*, 140.75, 143.8, 146.85, 149.9, and 151.95 mc. Limits: Not less than 6 db (S+N)/N ratio, squelch threshold 0 microvolt (opens on noise).

F. Selectivity Test Requirements.

(1) With the Hewlett-Packard 608D Signal Generator connected to the receiver antenna input, adjust the generator output to 127.5 mc and 2 uv, no modulation.

(2) Set the receiver SQUELCH control for maximum sensitivity, and connect the vtvm to TP5 on the i-f and audio module.

(3) Loosely couple Receiver 51J to the 500-kc output.

(4) Adjust the signal generator frequency so as to obtain an i-f frequency of exactly 500 kc as indicated on the 51J using the second harmonic (1000 kc). Note this reference output level as read on the vtvm at TP5.

(5) Adjust the signal generator output level to 4 uv (6 db), and adjust the generator frequency to either side of resonance until the reference vtvm indication noted in step d, is again obtained.

(6) Measure the + and -6 db frequencies with the 51J.

(7) Record the difference between the above frequencies as the total bandwidth. This should not be less than 40 kc.

(8) Adjust the signal generator output level to 2K uv, and repeat steps (5) through (7) for the 60-db points. This should not be more than 77 kc.

*Some sets are purchased with crystal complements that do not include reception frequencies higher than 135.95 mc.

G. AVC Characteristics.

(1) Adjust Hewlett-Packard 608D Signal Generator to 115.00 mc at 5 uv with 30% modulation at 1000 cps.

(2) With the receiver set to 115.00 mc, adjust the signal generator frequency for maximum avc voltage at TP5 on the i-f and audio module.

(3) Adjust the AURAL LEVEL control (R18) for 20 mw output for a zero reference.

(4) Adjust the signal generator output to 100K microvolts, and record the decibel change in output for input level using the output level of 20 mw as a reference. Decibel change should not be more than 4.0 db for 100K.

NOTE: When avc characteristics for audio output have been checked, the avc characteristics for ATCSS output have also been checked. Other channels may be checked in the same manner.

H. Squelch Performance.

(1) Set receiver to 118.00 mc. Rotate receiver SQUELCH control to its extreme counter-clockwise position. Tune the Hewlett-Packard 608D Signal Generator to 118.00 mc, and connect to receiver input. Increase generator output until squelch just opens. Record level at which the squelch opens.

(2) Decrease the signal generator output 20 db, and push the SQUELCH disable button. Note that the squelch opens.

(3) Repeat step (1) for each of the following frequencies: 120.30, 123.95, 124.30, 129.50, 134.70, 139.90, 140.90, 147.00, 151.95 mc. Limits: Minimum squelch opening point, not less than 25 uv with not more than 6 db variation between any two squelch opening levels. Gain control resistors R25 and R26 are chosen to balance the gain across the band. They may be zero resistance (bus wire).

(4) Set receiver frequency and signal generator to 118.00 mc. Adjust signal generator output to three microvolts, and set the receiver SQUELCH control so that the squelch just opens.

(5) Increase generator output; then slowly decrease output until squelch just closes. Record generator output at this point.

(6) Slowly increase generator output, and record the generator output where the squelch just opens. This should not be more than three decibels open-to-close.

(9) Check that pin 25 of P1 is grounded when the 51X-2 is set to any frequency between 108.0 and 117.95 mc.

I. ATC Output.

(1) Set the receiver to 115.00 mc, and adjust the Hewlett-Packard 608D Signal Generator for 1000 uv output, 30% modulation at 1000 cps.

(2) Check that the ATC/VOR/LOC potentiometer (R12) on the i-f and audio module is adjusted for 0.5-v output across a 100K-ohm load using a Hewlett-Packard 400C for measurement. Readjust the ATC/VOR/LOC potentiometer (R12) on the i-f and audio module, if necessary.

NOTE: If the 51X-2 being checked is for use with a 344B-1, 344A-1, or 344D-1, Instrumentation Unit, the ATCSS control (R12) should be adjusted for .5V into a 100,000-ohm load using a 1000-uv signal from a Boonton 211A Signal Generator externally modulated 30% with 30 cps at the 114.9-mc crystal position.

J. Audio Response.

(1) Connect 500-ohm load to audio output terminals of receiver. Tune the Hewlett-Packard 608D Signal Generator and receiver to 118.00 mc.

(2) Adjust the AURAL LEVEL control for 100-mw output while feeding in a 1000-uv, 1000-cps, 30% modulated signal.

(3) Measure the response at the following frequencies: 120, 300, 1000, 3750, and 5750 cps; then vary the modulation frequency to find the point of maximum output. Record this frequency and its level with respect to the reference level at 1000 cps. Limits: At least -20 db at 120 cps and 5750 cps; not more than 6 db variation between 300 and 3750 cps.

(4) With the receiver and generator tuned to 115.00 mc, adjust audio power to 100 milliwatts with 1000-uv, 1000-cps, 30% modulated signal. Tune receiver and generator to 118.00 mc, and measure the output power for a 1000-uv, 1000-cps, 30% modulated signal. Leave AURAL LEVEL control as set in step (2). The resulting power output should not be more than 50 mw.

NOTE: The 51X-2 is set at the factory for 100 mw of audio output with a 1000-uv signal modulated 30% with 1000 cps at a frequency below 118.00 mc. This setting will give a power output of approximately 40 mw above 118.00 mc in the communications band for 30% modulated signals. This power output may be too high for some installations. If it is, adjust the AURAL LEVEL control, R18, in the i-f and audio module to a level suitable for the particular installation.

K. Audio Distortion.

Measure the distortion at the audio output at 1000 cps using 30% modulation. Use a signal generator output of 1000 uv, and maintain 100 mw output for each condition. There should not be more than 7.5% distortion at 30% modulation.

L. Disabling Circuit.

(1) Connect variable source of d-c voltage to pin 23 of P1 of the main frame.

(2) Starting from a low voltage, increase voltage until receiver becomes disabled. The voltage necessary for disabling the receiver should be not more than 20 v.

M. Spurious Rejection.

(1) Adjust the Hewlett-Packard 608D Signal Generator output to 2 uv at 108.00 mc, and set the receiver to 108.00 mc.

(2) Connect the oscilloscope to the audio output and the vtvm to TP5 on the i-f and audio module.

(3) Tune the signal generator for maximum avc voltage at TP5, and note this avc reference level.

(4) Adjust the signal generator output to 200K uv with 1000 cps, 30% modulation, and search the frequency range 80 to 200 mc for spurious signals which will appear on the oscilloscope.

(5) When a spurious is located, remove the 1000-cps modulation, and adjust the generator output to obtain the same avc reference level noted in step (3).

CAUTION: BE CERTAIN THAT THE SPURIOUS RESPONSE IS NOT DUE TO A SPURIOUS OUTPUT OF THE GENERATOR. WITH SOME EXPERIENCE, IT IS POSSIBLE TO DISTINGUISH THESE SPURIOUS RESPONSES FROM A TRUE RECEIVER SPURIOUS. WHEN IN DOUBT, CHECK BY USING A DIFFERENT MODEL OF GENERATOR.

(6) Repeat steps (1) to (5) for receiver frequencies as desired. Spurious responses should be 80 db down (20,000 uv).

N. Low Supply Voltage Operation.

(1) Turn off receiver for a sufficient time to allow filaments to cool.

(2) If using d-c supply, adjust voltage to 22 volts, and turn on receiver. Note that a 10-uv, 1000-cps, 30% modulated signal results in audio output. Operate channel selector, and note that Autopositioner sets up properly.

(3) If using a-c supply, additionally adjust voltage to 92 volts, and note that 10-uv signal is passed through receiver and that Autopositioner operates properly.

O. Alternate Power Supply Operation.

(1) Remove the power supply used in the previous tests, and substitute the alternate supply.

(2) Measure sensitivity at 115.2 mc and 127.50 mc as in paragraph 2.E. The limits of the (S+N)/N ratio should be not less than 6 db.

P. Glide Slope Receiver Power.

(1) With power applied to the receiver, measure the d-c voltage from pin 27 of P1 to ground.

(2) Check that the 27.5-v is obtained at each of the frequencies specified below and that the voltage is zero at all other frequencies: 108.1, 108.3, 108.5, 108.7, 108.9, 109.1, 109.3, 109.5, 109.7, 109.9, 110.1, 110.3, 110.5, 110.7, 110.9, 111.1, 111.3, 111.5, 111.7, 111.9 mc.

3. MECHANICAL ALIGNMENT OF DRIVE MECHANISM.

NOTE: Mechanical alignment is not required ordinarily unless r-f and variable i-f module is disassembled.

Refer to figure 702 for preliminary mechanical adjustment. The final mechanical alignment is done as follows after first connecting the r-f and variable i-f module to the remainder of the receiver using a two-foot patch cable.

A. Check that preliminary module synchronization has been made in accordance with figure 702.

B. Connect r-f unit to receiver, and apply power. Cycle each Autopositioner in turn, and note that the front switch on each Autopositioner switch stack closes first. If these switch sections do not operate properly, check contact adjustment as outlined in figure 702.

C. Check that the pawl enters the stop wheel at each 50-kilocycle and each megacycle channel. The muting switch should open when the pawl enters the stop wheel and close when the motor is running.

NOTE: If the control unit used does not channel to 108.00 mc, the receiver may be positioned to 108.00 mc in either of two ways: (1) Ground pin 20, the N wire, of the receiver rear plug and channel the control unit to 136.00 mc. The receiver will set up at 108.00 mc. (2) Insert a mating connector into the rear plug to which only 27.5 volts, ground, and the following jumpers have been connected. Connect pins 6, 8, 17, and 20 (mc control wires A, C, M, and N) and pins 10 and 16 (kc control wires E and L) to ground. Connect together, and leave ungrounded, pins 7 and 9 (mc control wires B and D). Connect together, and leave ungrounded, pins 11, 12, and 13 (kc control wires F, G, and H). If it is desired, other specific frequencies may be utilized in a similar manner by studying the seeking switch charts, figures 701A and 701B.

D. If Autopositioner appears to be synchronized improperly, break the primary power input at the point where the dials indicate 108.00 mc and the pawls have engaged the stop wheels. Check S4, S5, S6, S7, S8, and S9 switch stators and rotors for orientation in accordance with figure 702. If adjustment is required, make sure on retightening clamping collars that end play is not limited by the collars.

E. Starting from 108.00 mc, cycle the 50-kc Autopositioner so that the inaccessible setscrew of the 50-kc drive gear clamping collar can be reached and tightened.

F. Starting from 108.00 mc, cycle the two-megacycle Autopositioner so that the inaccessible setscrew of the two-megacycle drive shaft collar can be reached and tightened.

G. Cycle receiver to 151.95 mc. Loosen top screw on differential clamp (see figure 702), and readjust position of tuning capacitor shaft so the index on the coupler lines up with the index on the capacitor.

Connect the module in a test setup similar to that in paragraph 4.E., r-f alignment, and inject a 151.95-mc* signal into the set. Obtain an agc reading of three volts. Rock the tuning capacitor C2 back and forth until a peak reading is obtained. Keep the agc level below three volts by reducing the input to the receiver while making adjustments. Adjust lateral position of differential output shaft to allow 0.010 to 0.015 inch end play in the differential frame. Tighten both setscrews on the differential clamp. Make sure clamp is not limiting end play.

*Some sets are purchased with crystal complements that do not include reception frequencies higher than 135.95 mc. When one of these sets is encountered and an adjustment frequency of 151.95 mc is called out, use 135.95 mc instead. Adjustment frequencies between 135.95 and 151.95 mc then should be ignored. In this case, inject a 135.95-mc signal into the set, and rock the tuning capacitor back and forth until a peak reading is obtained.

MEGACYCLE POSITION	S9				S6		S9
	A	B	C	D	J	M	N
108	X	O	X	O		X	X
109	X	O	X	O	X		X
110	X	X	O	X		X	X
111	X	X	O	X	X		X
112	X	X	X	O		X	X
113	X	X	X	O	X		X
114	O	X	X	X		X	X
115	O	X	X	X	X		X
116	O	O	X	X		X	X
117	O	O	X	X	X		X
118	X	O	O	X		X	X
119	X	O	O	X	X		X
120	O	X	O	O		X	X
121	O	X	O	O	X		X
122	O	O	X	O		X	X
123	O	O	X	O	X		X
124	O	O	O	X		X	X
125	O	O	O	X	X		X
126	X	O	O	O		X	X
127	X	O	O	O	X		X
128	X	X	O	O		X	X
129	X	X	O	O	X		X
130	O	X	X	O		X	X
131	O	X	X	O	X		X
132	X	O	X	X		X	X
133	X	O	X	X	X		X
134	O	X	O	X		X	X
135	O	X	O	X	X		X
136	X	O	X	O		X	O
137	X	O	X	O	X		O
138	X	X	O	X		X	O
139	X	X	O	X	X		O
140	O	X	X	O		X	O
141	O	X	X	O	X		O
142	O	O	X	X		X	O
143	O	O	X	X	X		O
144	X	O	O	X		X	O
145	X	O	O	X	X		O
146	X	X	O	O		X	O
147	X	X	O	O	X		O
148	X	X	X	O		X	O
149	X	X	X	O	X		O
150	O	X	X	X		X	O
151	O	X	X	X	X		O

THE WIRES OF THE 2-MC SWITCHES ARE GROUNDED OR CONNECTED AS SHOWN ABOVE WHEN THE INDICATED POSITIONS ARE SELECTED. AN X INDICATES THAT A WIRE IS CONNECTED TO GROUND. AN O INDICATES WIRES CONNECTED TOGETHER AND NOT GROUNDED.

THIS TABLE APPLIES TO THE REMOTE SELECTOR SWITCHES ONLY. AT THE RECEIVER, AN O INDICATES WIRES CONNECTED TOGETHER THAT GO TO THE 2-MC AP RELAY. ALSO, THE CODE OF THE J AND M WIRES IS INTERCHANGED TO INDICATE GROUNDING OF THE J WIRES AT EVEN-NUMBERED MC AND GROUNDING OF THE M WIRES AT ODD-NUMBERED MC.

2-Mc Seeking Switch Wire Table
Figure 701A

50 KILOCYCLE POSITION	S4					
	E	F	G	H	K	L
00	X	O	O	O		X
05	X	O	O	O	X	
10	O	X	O	O		X
15	O	X	O	O	X	
20	X	O	X	O		X
25	X	O	X	O	X	
30	O	X	O	X		X
35	O	X	O	X	X	
40	O	O	X	O		X
45	O	O	X	O	X	
50	X	O	O	X		X
55	X	O	O	X	X	
60	X	X	O	O		X
65	X	X	O	O	X	
70	O	X	X	O		X
75	O	X	X	O	X	
80	O	O	X	X		X
85	O	O	X	X	X	
90	O	O	O	X		X
95	O	O	O	X	X	

THE WIRES OF THE 50-KC SWITCHES ARE GROUNDED OR CONNECTED AS SHOWN WHEN THE INDICATED POSITIONS ARE SELECTED. AN X INDICATES THAT THE WIRE IS CONNECTED TO GROUND. AN O INDICATES WIRES CONNECTED TOGETHER AND NOT GROUNDED.

THIS TABLE APPLIES TO THE REMOTE SELECTOR SWITCHES ONLY. AT THE RECEIVER, AN O INDICATES WIRES CONNECTED TOGETHER THAT GO TO THE .05-KC AP RELAY. ALSO, THE CODE OF THE K AND L WIRES IS INTERCHANGED TO INDICATE GROUNDING OF THE K WIRE AT EVEN-NUMBERED .05 KC AND GROUNDING OF THE L WIRE AT ODD-NUMBERED .05 KC.

50-Kc Seeking Switch Wire Table
Figure 701B

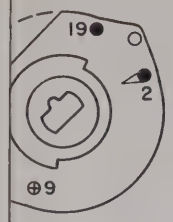

S6 REAR

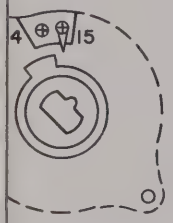

EAR SEGMENT

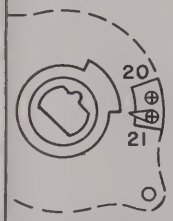

EAR SEGMENT

OLS

D

NOTES:

1. PRIOR TO SYNCHRONIZATION OF THE MODULE PER FOLLOWING NOTES (2 THRU 12) INSURE THE FOLLOWING:
   (A) SET SCREWS OF ALL CLAMPING COLLARS ARE LOOSE.
   (B) THAT BOTH AUTOPOSITIONER PAWLS ARE FULLY ENGAGED IN RESPECTIVE STOP-WHEEL NOTCHES.
2. VISUALLY ALIGN ROTORS OF S4 FRONT AND S4 FRONT SEGMENT AS SHOWN IN DETAIL "A". THIS CORRESPONDS TO A 50KC AUTOPOSITIONER POSITION OF ".00"KC. INSURE THAT 50KC DRIVE GEAR AND ITS RETAINING RING DOES NOT LIMIT AUTOPOSITIONER END PLAY. TIGHTEN LEFT SET SCREW (VIEWED FROM FRONT OF MODULE) OF 50KC DRIVE GEAR CLAMPING COLLAR. BE SURE THAT THE END PLAY OF THE 50KC AUTOPOSITIONER SHAFT IS NOT LIMITED BY THE COLLAR. POSITION THE DRIVE GEAR IN THE CENTER OF ITS END PLAY BEFORE TIGHTENING THE COLLAR.
3. POSITION TUNING TABLE FOLLOWERS ON LOWEST "OPERATING" POINT ON CAMS. POSITION GEAR ITEM(AC) TO ALLOW .010 NOMINAL END PLAY OF CAM SHAFT AND FULLY TIGHTEN SET SCREWS IN POSITION SHOWN ON GEAR CLAMPING COLLAR ITEM(AA).
4. VISUALLY ALIGN ROTOR OF S6 AS SHOWN IN DETAIL "A" LATERALLY POSITION S6 SWITCH DRIVE COLLAR SO AS NOT TO LIMIT END PLAY OF THE CAM SHAFT, ITEM (AF) AND TIGHTEN THE COLLAR SET SCREWS.
5. NOMINALLY CENTER THE ".00" POSITION ON THE 50KC DIAL WITHIN THE BEARING PLATE APERTURE. POSITION THE RIVETED DIAL DRIVE CAM ARM ON THE LOW POINT OF THE DIAL DRIVE CAM (1ST LOW POINT REACHED WHEN ROTATING THE CAM COUNTERCLOCKWISE FACING THE FRONT OF THE UNIT) MESH THE SWITCH DRIVE GEAR WITH THE DIAL CAM DRIVE GEAR AND THE GEAR ON THE 50KC CAM SHAFT. ADJUST FOR NOMINAL LATERAL FULL MESH. TIGHTEN THE SET SCREWS IN THE CLAMPING COLLAR AS SHOWN.
6. LOOSEN COLLAR CLAMP ON REAR OF DIFFERENTIAL AND ADJUST TUNING CAPACITOR SO THE ROTOR PLATES FULLY ENGAGE THE STATOR PLATES. POSITION ONE SET SCREW OF COLLAR ON BOTTOM AND THE OTHER TOWARDS THE INSIDE. TIGHTEN BOTTOM SCREW ONLY.
7. LOOSEN DIFFERENTIAL CAM CLAMPING COLLAR, ITEM (BA) AND POSITION DIFFERENTIAL CAM, ITEM (AD) SO THAT THE CAM FOLLOWER ARM JUST CLEARS THE HIGH POINT OF THE CAM AND RESTS ON THE LOWEST OPERATING POINT OF THE CAM. TIGHTEN SET SCREWS OF DIFFERENTIAL CAM CLAMPING COLLAR AS SHOWN.
8. VISUALLY ALIGN ROTORS OF S7 & S9 AS SHOWN IN DETAIL "A". THIS CORRESPONDS TO A 2 MC AUTOPOSITIONER SETTING OF "108"MC. TIGHTEN THE BOTTOM SET SCREW ON 2MC DRIVE SHAFT COLLAR AS SHOWN.
9. AFTER ALIGNMENT OF S7 & S9 AND BEFORE ATTACHING COVER, ITEM (AH), ALIGN SWITCH ROTOR TAB OF S3 AS SHOWN. TIGHTEN SWITCH DRIVE COLLAR AS SHOWN.
10. NOMINALLY CENTER THE 2MC DIAL TO "108" WITHIN THE BEARING PLATE APERTURE. SEAT 2MC DIAL SHAFT DRIVE COLLAR AGAINST RETAINING RING AND TIGHTEN SET SCREWS AS SHOWN.
11. VISUALLY ALIGN ROTOR OF S8 AS SHOWN IN DETAIL B. TIGHTEN THE SWITCH DRIVE COLLAR SET SCREWS AS SHOWN.
12. IN ALL CASES WHERE COLLARS TIGHTEN ON SPLIT HUBS, MAKE CERTAIN SET SCREWS DO NOT TIGHTEN DOWN ON CROSS SLOTS IN HUB.
13. (SEE DETAIL C) SPRING LOAD THE DIFF. OUTPUT SHAFT PRIOR TO INSTALLATION OF THE RF AMPLI SUBASSY, ITEM(AP) TO 8^{+1}_{-0} IN. OZ. (MEASURED WITH THE 50KC CAM ARM FOLLOWER ON THE LOW POINT OF THE CAM). LOAD BY ROTATING THE SPRING LOADING IDLER GEAR CCW (VIEWED FROM FRONT).
14. INSURE THAT ALL POROUS BRONZE (OILITE) BEARINGS ARE LUBRICATED WITH AN-O-6A OIL.
15. PRIOR TO ASSEMBLY: COAT WORKING SURFACE ONLY OF CAMS WITH LUBRICANT 005 0334 00 AND WIPE OFF ALL VISIBLE REMAINS CAUTION: KEEP BORE OF CAM, ITEM(AD), FREE OF LUBRICANT.
16. UPON ASSEMBLY, LUBRICATE WORKING SURFACE OF CAMS AND TUNING TABLE GUIDE SLOTS IN THE TABLE, GEAR PLATE AND VAR. I.F. SUPPORT BRACKET WITH A THIN FILM OF LUBRICANT 005 0353 00.
17. CAUTION: KEEP A/P CLUTCH SURFACES AND CLUTCH GEAR TEETH FREE OF FOREIGN CONTAMINANTS, (GREASE OIL ETC.) AT ALL TIMES.
18. ADJUST THE CONTACTS ON SOLENOIDS K1 & K2 AS FOLLOWS: (CAUTION: REFER TO NOTE 20.)
    1. SO THAT .020 MIN. GAP EXISTS BETWEEN CONTACTS WHEN THE SOLENOID IS DE-ENERGIZED AND THE PAWL TIP IS FULLY SEATED IN A NOTCH IN THE STOP-WHEEL.
    2. SO THAT THE MOTOR STARTING CONTACTS (i.e. THOSE TOWARD THE REAR OF THE MODULE) ARE CLOSED WHEN THE PAWL TIP IS RESTING ON THE FACE OF THE STOP-WHEEL (SURFACE BETWEEN NOTCHES).
    3. SO THAT .015 MIN. OVER-TRAVEL (FOLLOW UP) IS EVIDENT WHEN THE SOLENOID IS IN THE FULLY ENERGIZED POSITION.
    4. SO THAT THE RECEIVER MUTING CONTACTS (THOSE TOWARD THE FRONT OF THE MODULE) CLOSE AT THE SAME TIME PRIOR TO THE MOTOR STARTING CONTACTS BE SURE THAT THE END PLAY OF THE MEGACYCLE AUTOPOSITIONER SHAFT IS NOT LIMITED BY THE COLLAR. POSITION THE DRIVE GEAR IN THE CENTER OF ITS END PLAY BEFORE TIGHTENING THE COLLAR.
19. TIGHTEN SET SCREWS WHERE SPECIFIED USING 5 TO 6 INCH POUNDS OF APPLIED TORQUE.
20. ADJUST ONLY THE STATIONARY CONTACTS OF K1 AND K2. USE SMOOTH JAWED PLIERS AND ADJUST AT THE CENTER OF THE ARMS.

C05 121 6

Mechanical Alignment Procedure
Figure 702

50 KILOCYCLE POSITION	S4					
	E	F	G	H	K	L
00	X	O	O	O		X
05	X	O	O	O	X	
10	O	X	O	O		X
15	O	X	O	O	X	
20	X	O	X	O		X
25	X	O	X	O	X	
30	O	X	O	X		X
35	O	X	O	X	X	
40	O	O	X	O		X
45	O	O	X	O	X	
50	X	O	O	X		X
55	X	O	O	X	X	
60	X	X	O	O		X
65	X	X	O	O	X	
70	O	X	X	O		X
75	O	X	X	O	X	
80	O	O	X	X		X
85	O	O	X	X	X	
90	O	O	O	X		X
95	O	O	O	X	X	

THE WIRES OF THE 50-KC SWITCHES ARE GROUNDED OR CONNECTED AS SHOWN WHEN THE INDICATED POSITIONS ARE SELECTED. AN X INDICATES THAT THE WIRE IS CONNECTED TO GROUND. AN O INDICATES WIRES CONNECTED TOGETHER AND NOT GROUNDED.

THIS TABLE APPLIES TO THE REMOTE SELECTOR SWITCHES ONLY. AT THE RECEIVER, AN O INDICATES WIRES CONNECTED TOGETHER THAT GO TO THE .05-KC AP RELAY. ALSO, THE CODE OF THE K AND L WIRES IS INTERCHANGED TO INDICATE GROUNDING OF THE K WIRE AT EVEN-NUMBERED .05 KC AND GROUNDING OF THE L WIRE AT ODD-NUMBERED .05 KC.

50-Kc Seeking Switch Wire Table
Figure 701B

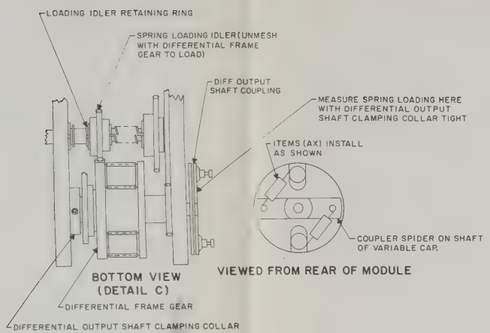

BOTTOM VIEW (DETAIL C)

VIEWED FROM REAR OF MODULE

FRONT VIEW OF MODULE

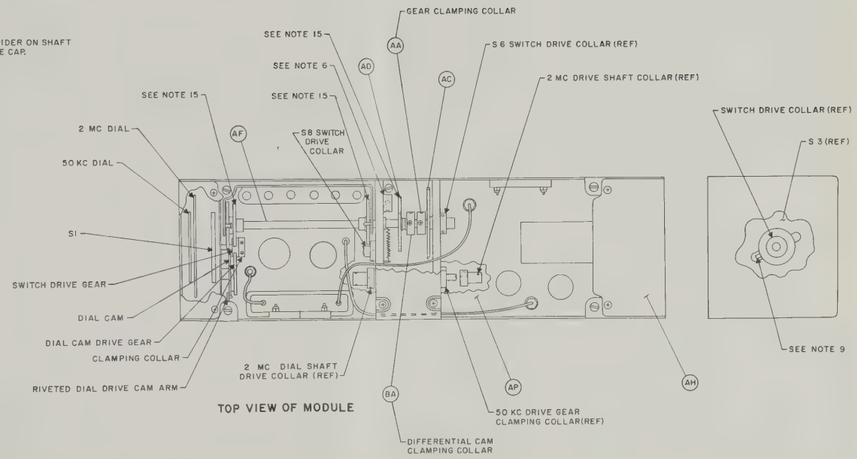

TOP VIEW OF MODULE

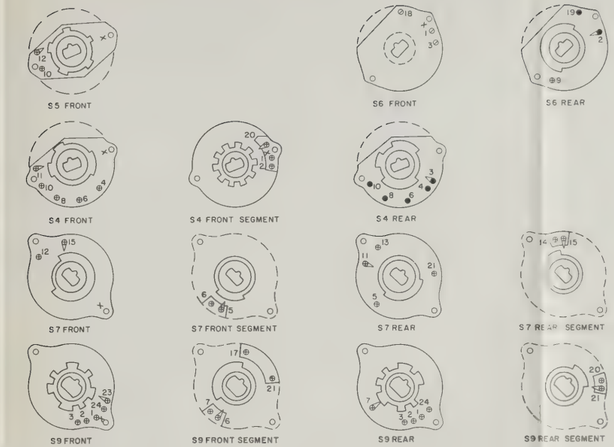

ALL SWITCHES VIEWED FROM REAR OF MODULE (DETAIL A)

S8 FRONT S8 REAR

S8 VIEWED FROM FRONT OF MODULE (DETAIL B)

KEY TO SWITCH SYMBOLS	
⊕	SHORT CLIP
⊕	LONG CLIP
●	SHORT CLIP-REVERSED
●	LONG CLIP-REVERSED
⊖	DUMMY CLIP

NOTES:

1. PRIOR TO SYNCHRONIZATION OF THE MODULE PER FOLLOWING NOTES (2 THRU 12) INSURE THE FOLLOWING:
   (A) SET SCREWS OF ALL CLAMPING COLLARS ARE LOOSE
   (B) THAT BOTH AUTOPOSITIONER PAWLS ARE FULLY ENGAGED IN RESPECTIVE STOP-WHEEL NOTCHES
2. VISUALLY ALIGN ROTORS OF S4 FRONT AND S4 FRONT SEGMENT AS SHOWN IN DETAIL "A". THIS CORRESPONDS TO A 50KC AUTOPOSITIONER POSITION OF "50"KC. INSURE THAT 50KC DRIVE GEAR AND ITS RETAINING RING DOES NOT LIMIT AUTOPOSITIONER END PLAY. TIGHTEN LEFT SET SCREW (VIEWED FROM FRONT OF MODULE) OF 50KC DRIVE GEAR CLAMPING COLLAR. BE SURE THAT THE END PLAY OF THE 50KC AUTOPOSITIONER SHAFT IS NOT LIMITED BY THE COLLAR. POSITION THE DRIVE GEAR IN THE CENTER OF ITS END PLAY BEFORE TIGHTENING THE COLLAR
3. POSITION TUNING TABLE FOLLOWERS ON LOWEST "OPERATING" POINT ON CAMS. POSITION GEAR (ITEM(AC)) TO ALLOW .010 NOMINAL END PLAY OF CAM SHAFT AND FULLY TIGHTEN SET SCREWS IN POSITION SHOWN ON GEAR CLAMPING COLLAR (ITEM(AA))
4. VISUALLY ALIGN ROTOR OF S6 AS SHOWN IN DETAIL "A". LATERALLY POSITION S6 SWITCH DRIVE COLLAR SO AS NOT TO LIMIT END PLAY OF THE CAM SHAFT, ITEM (AF) AND TIGHTEN THE COLLAR SET SCREWS.
5. NOMINALLY CENTER THE "100" POSITION ON THE 50KC DIAL WITHIN THE BEARING PLATE APERTURE. POSITION THE RIVETED DIAL DRIVE CAM ARM ON THE LOW POINT OF THE DIAL DRIVE CAM (1ST LOW POINT REACHED WHEN ROTATING THE CAM COUNTERCLOCKWISE FACING THE FRONT OF THE UNIT) MESH THE SWITCH DRIVE GEAR WITH THE DIAL CAM DRIVE GEAR AND THE GEAR ON THE 50KC CAM SHAFT. ADJUST FOR NOMINAL LATERAL FULL MESH. TIGHTEN THE SET SCREWS IN THE CLAMPING COLLAR AS SHOWN
6. LOOSEN COLLAR CLAMP ON REAR OF DIFFERENTIAL AND ADJUST TUNING CAPACITOR SO THE ROTOR PLATES FULLY ENGAGE THE STATOR PLATES. POSITION ONE SET SCREW OF COLLAR ON BOTTOM AND THE OTHER TOWARDS THE INSIDE. TIGHTEN BOTTOM SCREW ONLY
7. LOOSEN DIFFERENTIAL CAM CLAMPING COLLAR, ITEM (BA) AND POSITION DIFFERENTIAL CAM, ITEM (AD) SO THAT THE CAM FOLLOWER ARM JUST CLEARS THE HIGH POINT OF THE CAM AND RESTS ON THE LOWEST OPERATING POINT OF THE CAM. TIGHTEN SET SCREWS OF DIFFERENTIAL CAM CLAMPING COLLAR AS SHOWN
8. VISUALLY ALIGN ROTORS OF S7 & S9 AS SHOWN IN DETAIL "A". THIS CORRESPONDS TO A 2 MC AUTOPOSITIONER SETTING OF "100" MC. TIGHTEN THE BOTTOM SET SCREW ON 2MC DRIVE SHAFT COLLAR AS SHOWN
9. AFTER ALIGNMENT OF S7 & S9 AND BEFORE ATTACHING COVER, ITEM (AH), ALIGN SWITCH ROTOR TAB OF S3 AS SHOWN. TIGHTEN SWITCH DRIVE COLLAR AS SHOWN
10. NOMINALLY CENTER THE 2MC DIAL TO "100" WITHIN THE BEARING PLATE APERTURE. SEAT 2MC DIAL SHAFT DRIVE COLLAR AGAINST RETAINING RING AND TIGHTEN SET SCREWS AS SHOWN
11. VISUALLY ALIGN ROTOR OF S8 AS SHOWN IN DETAIL "B". TIGHTEN THE SWITCH DRIVE COLLAR SET SCREWS AS SHOWN
12. IN ALL CASES WHERE COLLARS TIGHTEN ON SPLIT HUBS, MAKE CERTAIN SET SCREWS DO NOT TIGHTEN DOWN ON CROSS SLOTS IN HUB
13. (SEE DETAIL C) SPRING LOAD THE DIFF. OUTPUT SHAFT PRIOR TO INSTALLATION OF THE RF AMPLI SUBASSY. (ITEM(AP)) TO 8±1 IN OZ. (MEASURED WITH THE 50KC CAM ARM FOLLOWER ON THE LOW POINT OF THE CAM). LOAD BY ROTATING THE SPRING LOADING IDLER GEAR CCW (VIEWED FROM FRONT)
14. INSURE THAT ALL POROUS BRONZE (OILITE) BEARINGS ARE LUBRICATED WITH AN-O-6A OIL
15. PRIOR TO ASSEMBLY, COAT WORKING SURFACE ONLY OF CAMS WITH LUBRICANT 005 033M 00 AND WIPE OFF ALL VISIBLE REMAINS. CAUTION: KEEP BORE OF CAM, (ITEM(AD)), FREE OF LUBRICANT
16. UPON ASSEMBLY, LUBRICATE WORKING SURFACE OF CAMS AND TUNING TABLE GUIDE SLOTS IN THE TABLE, GEAR PLATE AND VAR. I.F. SUPPORT BRACKET WITH A THIN FILM OF LUBRICANT 005 033J 00
17. CAUTION: KEEP A/P CLUTCH SURFACES AND CLUTCH GEAR TEETH FREE OF FOREIGN CONTAMINANTS, (GREASE OIL ETC.) AT ALL TIMES
18. ADJUST THE CONTACTS ON SOLENOIDS K1 & K2 AS FOLLOWS: (CAUTION: REFER TO NOTE 20.)
    1. SO THAT .020 MIN. GAP EXISTS BETWEEN CONTACTS WHEN THE SOLENOID IS DE-ENERGIZED AND THE PAWL TIP IS FULLY SEATED IN A NOTCH IN THE STOP-WHEEL
    2. SO THAT THE MOTOR STARTING CONTACTS (i.e. THOSE TOWARD THE REAR OF THE MODULE) ARE CLOSED WHEN THE PAWL TIP IS RESTING ON THE FACE OF THE STOP-WHEEL (SURFACE BETWEEN NOTCHES)
    3. SO THAT .015 MIN. OVER-TRAVEL (FOLLOW UP) IS EVIDENT WHEN THE SOLENOID IS IN THE FULLY ENERGIZED POSITION
    4. SO THAT THE RECEIVER MUTING CONTACTS (THOSE TOWARD THE FRONT OF THE MODULE) CLOSE AT THE SAME TIME PRIOR TO THE MOTOR STARTING CONTACTS. BE SURE THAT THE END PLAY OF THE MEGACYCLE AUTOPOSITIONER SHAFT IS NOT LIMITED BY THE COLLAR. POSITION THE DRIVE GEAR IN THE CENTER OF ITS END PLAY BEFORE TIGHTENING THE COLLAR
19. TIGHTEN SET SCREWS WHERE SPECIFIED USING 5 TO 6 INCH POUNDS OF APPLIED TORQUE
20. ADJUST ONLY THE STATIONARY CONTACTS OF K1 AND K2. USE SMOOTH JAWED PLIERS AND ADJUST AT THE CENTER OF THE ARMS

Mechanical Alignment Procedure
Figure 702

C05 121 6

4. ELECTRICAL ALIGNMENT OF R-F AND VARIABLE I-F AMPLIFIER.

A. Test Equipment Required.

The following test equipments or their equivalents are required:

(1) Receiver 51X-2 (under text).

(2) Hewlett-Packard Model 410B VTVM.

(3) Boonton Type 202B Signal Generator or Hewlett-Packard 608D.

(4) Frequency measuring equipment.

(5) D-c vtvm.

(6) Frequency control selector such as Collins 614U-1.

(7) Daven Audio Output Meter.

(8) Patch Cable Kit, Collins P/N 545 4966 00.

(9) Special Alignment Tool, Collins P/N 542 4587 002.

B. Conditions.

(1) All tests specified herein shall be conducted under normal ambient conditions.

(2) Power supply voltage: 115 v 300-1000 cps and/or 27.5 v d-c depending upon which power supply module is plugged into the 51X-2.

C. Variable I-F Alignment.

(1) Connect the module to the receiver with the patch cable.

(2) Channel the 50-kc Autopositioner, and check output of all crystals of second oscillator for at least 1.0 v d-c at TP6 and for approximate frequency with a 51J receiver or a counter.

(3) Channel to low end of variable i-f (even + .00 mc). Inject variable i-f signal of 10.025 mc at first mixer grid of sufficient strength to obtain a reading on the agc line. Adjust slugs of L6 through L11 for maximum output.

(4) Channel to high end of variable i-f (odd mc + .95 mc). Inject variable i-f signal of 11.975 mc, and adjust C16, C19, C21, C31, and C36 for maximum output.

(5) Repeat steps (3) and (4) until no further improvement can be made. Always end with step (4). If maximum flatness of gain is desired, recheck slug adjustment at 10.975 mc.

D. Alignment of First Crystal Oscillator.

(1) Set module to 150 mc (134 mc if receiver is not equipped for extended coverage).

(2) With alignment tool, adjust slug of L34 (marked "150") or L26 (marked "134") for maximum d-c output (sharp peak) at TP7.

(3) Channel module to each even megacycle, and adjust slug marked with the appropriate channel frequency for maximum output.

(4) Channel module to 112 mc. Connect vtvm to mixer grid (TP2), and adjust C53 for maximum output.

(5) Channel module to 134 mc (146 mc if equipped for extended coverage). Adjust L37 with an insulated tool for maximum output.

(6) Repeat steps (4) and (5) until no further improvement is obtained. Slightly touch up C53, if necessary, at 134 mc (146 mc if equipped for extended coverage) after completion of alignment procedure.

(7) Loosely couple oscillator to frequency rack. Channel module to each even megacycle, and check frequency of each crystal according to the following table. If frequency is off more than 1000 cps, slightly readjust the appropriate slug of L14 through L35 to put the frequency within this range.

(8) Remove P3 from J3. Channel module to each even megacycle, and check voltages at TP2 with a d-c vtvm. This voltage should be at least one volt. A sudden appreciable drop in d-c voltage measured at TP2 on a channel in the band may indicate a defective crystal or improper synchronization of the Z1 tuner.

CAUTION: DO NOT DETUNE SLUG SO FAR THAT OUTPUT VOLTAGE AT TP7 DROPS MORE THAN 10%.

TABLE 702. CHANNEL VS CRYSTAL FREQUENCY (MC)

CHANNEL FREQUENCY	CRYSTAL FREQUENCY (mc)
108	48,9875
110	49,9875
112	50,9875
114	51,9875
116	52,9875
118	53,9875
120	54,9875
122	55,9875
124	56,9875
126	57,9875
128	58,9875
130	59,9875
132	60,9875
134	61,9875
136*	62,9875
138*	63,9875
140*	64,9875
142*	65,9875
144*	66,9875
146*	67,9875
148*	68,9875
150*	69,9875

* Only in receivers equipped for extended coverage

E. R-F Alignment.

(1) Allow the module to remain connected to the receiver as in paragraph 4.C.

(2) Channel module to 151.95 mc*. Feed in signal on antenna, and adjust C1, C3, C10, and C11 for maximum output on the agc line.

CAUTION: KEEP INPUT AT A LEVEL WHICH HOLDS AGC VOLTAGE BELOW THREE VOLTS.

(3) Channel module to 108.00 mc, and retune signal generator to 108.00 mc. With an insulated tool, adjust inductors L1, L2, L4, and L5 for maximum agc. Adjust coils by spreading or squeezing the turns on the ends opposite the coupled ends while maintaining about 1/4-inch spacing between L1 and L2 and about 5/16 inch between L4 and L5. That is, adjust L1 at cold end of coil, L2 at hot end, L4 at cold end, and L5 at the hot end.

(4) Repeat steps (2) and (3) until no further improvement can be made. Always end at 151.95 mc*.

F. Tracking of 4-Gang Tuning Capacitor.

The following procedure should not be attempted, and is not required, unless the tuning capacitor has been damaged or replaced, or extended range crystals have been added.

(1) Channel module to 151.95 mc (**135.95 mc) and remove the r-f bottom cover. Tune the 608D Signal Generator to correct frequency and feed a signal into the antenna input. Adjust C1, C3, C10, and C11 for maximum agc.

(2) Channel module to 148 mc (**133 mc). Using an insulated tool, bend the segment of the outer capacitor plate which has just become fully meshed, on C2 sections A, B, C, and D, for maximum agc.

(3) Repeat step (2) at the following frequencies, in each case adjusting the plate which has just become fully meshed.

FREQUENCY	FREQUENCY
148 mc	**122 mc
144 mc	**116 mc
138 mc	**111 mc
**133 mc	**108 mc
**127 mc	
**Alignment frequencies for receivers equipped with crystals for the 108.00- to 135.95-mc band only.	

(4) Return to 151.95 mc (**135.85 mc) and repeat steps (2) and (3) of paragraph E.

(5) Recheck tracking at each of the specified frequencies in step (3), rebending plates slightly if necessary.

(6) Replace r-f bottom cover, and repeat steps (2) and (3) of paragraph E.

*Refer to note in paragraph 3.G.

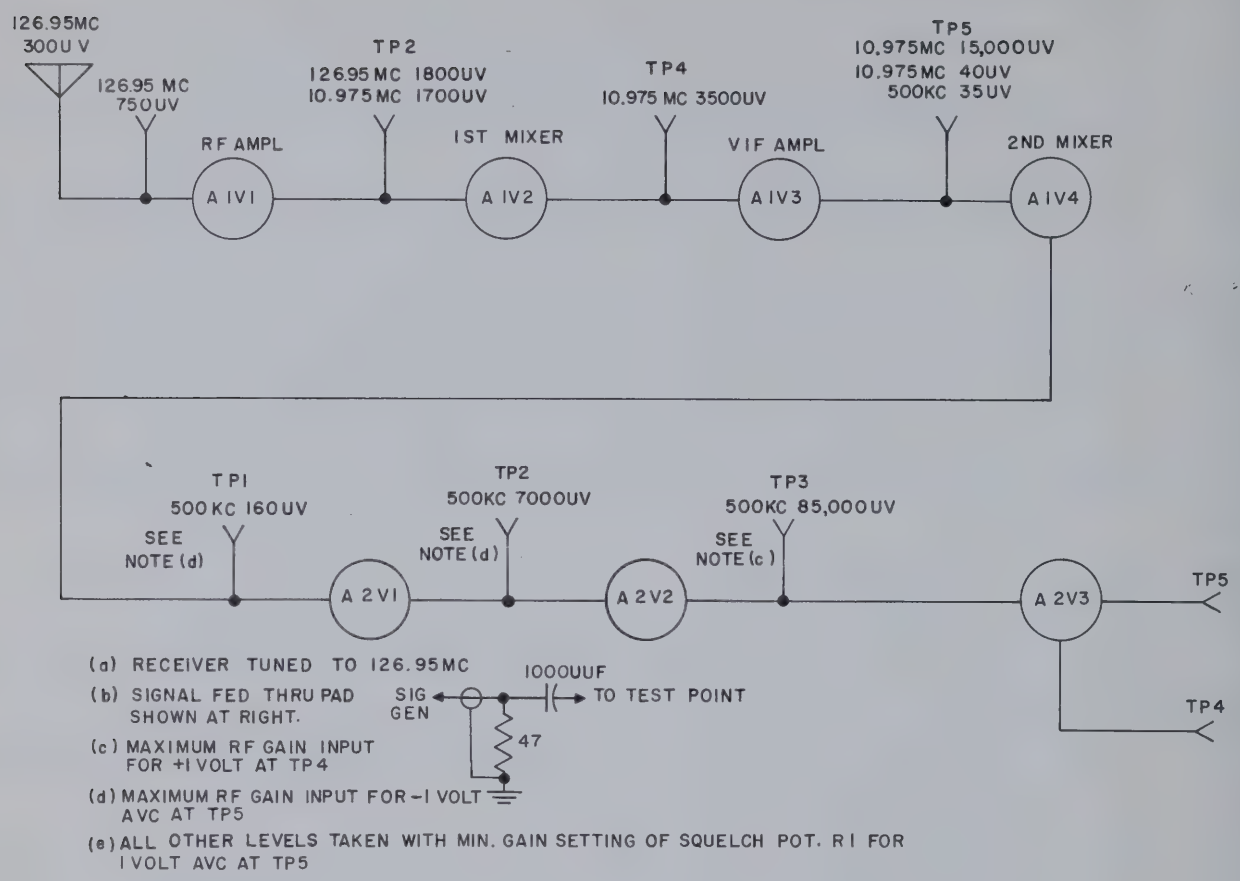

Stage Gain Chart
Figure 703

5. EVALUATION OF R-F AND VARIABLE I-F AMPLIFIER MODULE.

The test setup is the same as in paragraph 4, except that the r-f and variable i-f module should be mounted in the frame.

This test assumes that the i-f and audio module and the passive filter module are working satisfactorily.

Reference to stage gain chart, figure 703, will aid in making this test.

A. VHF Oscillator Output.

Record the deviation in frequency between that specified in table 703 and that measured. Record d-c voltage at TP2 for each frequency.

The frequency limits should not be more than plus or minus 1000 cps, and the output volts should be not less than 1.0 volt with P3 disconnected.

TABLE 703. BAND VS CRYSTAL FREQUENCY (MC)

BAND	CRYSTAL FREQUENCY (mc)
108-110	48,9875
110-111	49,9875
112-113	50,9875
114-115	51,9875
116-117	52,9875
118-119	53,9875
120-121	54,9875
122-123	55,9875
124-125	56,9875
126-127	57,9875
128-129	58,9875
130-131	59,9875
132-133	60,9875
134-135	61,9875
136-137*	62,9875
138-139	63,9875
140-141	64,9875
142-143	65,9875
144-145	66,9875
146-147	67,9875
148-149	68,9875
150-151	69,9875

*Refer to note in paragraph 3.G.

B. Sensitivity.

(1) Channel module to 108.00 mc, and connect the signal generator to the antenna input jack. Set SQUELCH control for maximum gain.

(2) Set signal generator output to three microvolts, and adjust generator for maximum agc.

(3) Adjust signal generator modulation to 30% at 1000 cps.

(4) Measure audio output at some point below 100 mw.

(5) Remove modulation, and note audio output level. Record the decibel drop in audio level as the (S+N)/N ratio. It should be not less than six decibels.

(6) Repeat steps (1) through (5) for each of the following frequencies: 108.00, 111.05, 114.10, 117.15, 120.20, 123.25, 126.30, 129.35, 132.40, 135.45, 138.50*, 141.55, 144.60, 147.65, 150.70, and 151.95 mc.

C. Squelch.

(1) Channel module to 118.00 mc, and set squelch threshold control to open at 5 uv.

(2) Channel receiver to each of the frequencies listed and record squelch threshold: 118.00, 120.30, 123.95, 124.30, 131.00, 139.90*, 140.90, 147.00, and 151.95 mc.

*Refer to note in paragraph 3.G.

Test limits should not be more than 2-to-1 squelch threshold variation. Resistors R25 and R26 may be changed to improve gain balance across the band. They may be reduced to zero ohms (bus wire).

D. Automatic Volume Control.

(1) Set module frequency at 115.00 mc.

(2) Tune signal generator for maximum agc. Set output for 5 uv 30% modulated at 1000 cps.

(3) Adjust audio gain for not more than 25 mw output for a zero reference.

(4) Adjust the signal generator output to 100K uv, and record the decibel change in output level. Should be not more than four decibels.

6. 500-KC PASSIVE FILTER ALIGNMENT.

NOTE: The input and output circuits of the filter are normally the only adjustments required. These adjustments must be made with the filter in the radio as explained in paragraph 8.

The filter has been completely aligned at the factory, using special test equipment, for optimum performance. Complete alignment of the filter should not be attempted in the field unless the filter has been proved defective because of part movement, damage, or repair. The three characteristics, bandwidth, insertion loss, and passband ripple, determine whether a filter is defective. The following checks, with all modules in place, will help localize a defective filter:

A. Insertion Loss.

Check end section tuning per paragraph 8. Make stage gain checks per figure 703, and compare with a good receiver. Replace suspected filter with a good one, and after aligning end sections, repeat stage gain tests. If the suspected filter exhibits a loss 3 db or more than the good filter, the alignment of the filter should be rechecked.

B. Bandwidth.

Perform the selectivity test per paragraph 2.F. If the 6-db bandwidth points are out of symmetry by 10 kc or more or the 6-db bandwidth is too wide, the filter may be defective. Substitute a good filter, and after aligning the end sections, recheck the selectivity. If the selectivity has been corrected, then the filter is defective and should be repaired and realigned.

C. Passband Ripple.

Check tuning of end sections. Note the agc voltage variation as measured at TP5 on the i-f and audio module as the frequency of the 608D signal applied to the antenna input is varied across the passband of the filter. The passband ripple is the ratio of the signal input required at a dip in the passband to give the same agc reading as the peak in the passband. If the ripple exceeds 3 db, the filter alignment should be rechecked.

D. Factory Method of Filter Alignment.

This method assures correct alignment; however, the method in paragraph E will give satisfactory results.

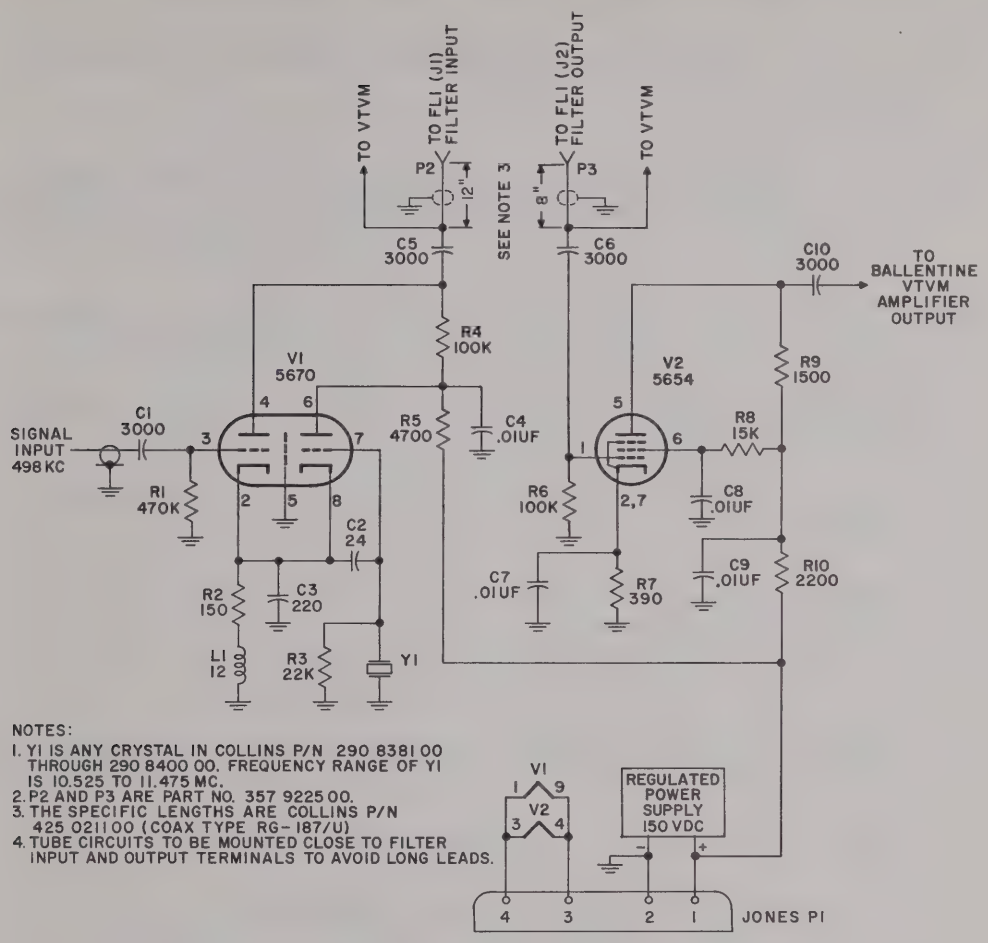

Filter Test Jig
Figure 704

(1) Test Equipment Required.

The following test equipments or their equivalents are required:

(a) Filter test jig, Collins part number 029 4358 023. See figure 704.

(b) Signal Generator, Measurements Model 65B.

(c) VTVM, Ballantine Model 314.

(d) Receiver, Collins 51J.

(e) Special Alignment Tool, Collins part number 542 4587 002.

(f) Regulated Power Supply, 150 v d-c, Low Ripple.

(2) Test Conditions.

(a) All tests shall be conducted under normal ambient conditions.

(b) All test equipment shall have a 15 minute warmup period.

(c) The noise output of the test jig amplifier shall not exceed 0.002 volt.

(3) Alignment Procedure.

(a) Remove the filter cover and connect the filter input (J1) and the output (J2) to the test jig input and output connectors respectively. Ground the filter case to the test jig chassis.

(b) Turn on power to the test jig. Connect the Ballantine VTVM to the test jig filter input terminals and 65B Signal Generator to the test jig r-f input.

(c) Set the signal generator frequency to 498 kc with the 51J, and adjust its output to give about 3/4 scale reading on the 0.1 volt scale of the vtvm.

(d) Short coil L2 to ground by shorting the exposed coil terminal to the filter base with a small screwdriver.

(e) Adjust coil L1 for a maximum indication on the vtvm using the position of the core nearest the base of the coil.

(f) Remove the screwdriver short at L2 and place at L3.

(g) Adjust coil L2 for a minimum indication on the vtvm using the position of the core nearest the base of the coil.

(h) Repeat steps d through g according to the following table.

TABLE 704. ALIGNMENT SEQUENCE

STEP	SHORTED	COIL TUNED	VTVM INDICATION
1	L2	L1	Max
2	L3	L2	Min
3	L4	L3	Max
4	L5	L4	Min
5	L6	L5	Max
6	L7	L6	Min
7	L8	L7	Max
8	L9	L8	Min
9	L9	L9	Max

(i) Repeat complete procedure steps d through g.

(j) Evaluate the filter according to instructions given in paragraph 7.

E. Alignment Using 51X-2 Modules.

(1) Test Equipment Required.

The following test equipments or their equivalents are required:

(a) Patch Cable Kit, Collins part number 545 4966 00.

(b) Ballantine 314 VTVM.

(c) Measurements Model 65B Signal Generator.

(d) Frequency measuring equipment.

(e) Special alignment tool, Collins part number 542 4587 002.

(f) 51X-2 Receiver in operating condition.

(2) Conditions.

(a) All tests herein specified should be conducted under normal ambient conditions.

(b) The associated test equipment should be allowed a 15-minute warmup period before any tests are performed.

(3) Alignment Procedure.

(a) Remove r-f and variable i-f and i-f and audio modules, and connect with patch cables to main frame.

(b) Remove the filter from the main frame by removing four screws and the two connectors, P2 and P3.

(c) Remove the cover from the filter.

(d) Reconnect P2 and P3, and place filter on frame so that all adjustments are accessible.

(e) Channel the receiver to some frequency higher than 118.00 mc, and inject a 498-kc signal into the second mixer grid at TP5. Adjust SQUELCH control for minimum gain.

(f) Connect Ballantine VTVM to J1.

(g) Turn on power, and adjust signal level until a reading is obtained.

(h) Short coil L2 to ground by shorting the exposed coil terminal to the filter base with a small screwdriver.

(i) Adjust coil L1 for maximum indication on the vtvm using the position of the core nearest the base of the coil (use special alignment tool).

(j) Remove the screwdriver short at L2, and place it at L3.

(k) Adjust coil L2 for minimum vtvm indication using the position of the core nearest the base of the coil (use special alignment tool).

(l) Repeat step (h) through (k) according to table 704.

(m) Evaluate the filter as directed in paragraph 7.

7. EVALUATION OF 500-KC PASSIVE FILTER.

A. Evaluation Using Filter Test Jig.

Test setup is the same as used in paragraph 6.D.(3).

(1) Insertion Loss.

(a) Adjust the 65B Signal Generator for a convenient reading on the vtvm decibel scale. Note the reading.

(b) Reconnect the vtvm to the filter output connection, and note the decrease in the vtvm reading. The decrease should be less than 2.5 db.

(2) Bandwidth.

(a) Decrease the signal generator output attenuator to the X100 scale, and reconnect the vtvm to the amplifier output. Set the vtvm to the 0.1-volt scale.

(b) Sweep the passband and locate the point of peak response. Adjust the signal generator output for a vtvm reading of 10 db.

(c) Vary the frequency of the signal generator above and below 500 kc, and determine the frequencies at which the vtvm reads down 4 db with the 51J. The plus and minus 4-db frequencies should be 20 kc or more and the total 4-db bandwidth at least 40 kc.*

(d) Reduce the signal generator attenuator to X10 and the vtvm to the 0.01-volt range. Locate the frequency of maximum response, and adjust signal generator level for a 10-db reading on the vtvm.

(e) Increase the frequency of signal generator at least 40 kc, and adjust the attenuator to X10K. Adjust the signal generator frequency above and below 500 kc until the 10-db reading is obtained on the vtvm. Measure the frequency using the 51J set to the second harmonic.

(f) The plus and minus 60-db half bandwidths as measured in step e should each be less than 46 kc with the sum being less than 82 kc.

(3) Passband Ripple.

(a) Reduce the signal generator output to X100, and increase vtvm to the 0.1-volt range with the vtvm on the amplifier output.

(b) Sweep the frequency range of 500 plus and minus 18 kc, and note the maximum variation of output in db. Should be less than 3 db.

B. Evaluation Tests Using 51X-2 Modules.

The test setup is the same as used in paragraph 6.E.(3).

(1) Insertion Loss.

(a) Adjust the 65B Signal Generator output for a convenient reading on the vtvm db scale. Note the reading.

* If total bandwidth meets requirements at 4 db but plus and minus deviations are not met, realign filter at slightly different frequency in order to make passband more symmetrical about 500 kc.

(b) Connect the vtvm to the filter output connection J2. The decrease in vtvm reading should be less than 2.5 db.

(2) Bandwidth.

(a) Adjust the signal generator step attenuator for a convenient reading on the vtvm connected to J2.

(b) Sweep the passband, and locate the point of peak response.

(c) Vary the generator above and below 500 kc, and determine the frequencies at which the vtvm indication is 4 db down.

(d) Record the two frequencies. The deviation of each should be not less than 20 kc, and the total should be not less than 40 kc.*

(e) Locate the frequency of maximum response, and adjust signal generator input for a convenient reading on the vtvm.

(f) Increase the frequency of the generator by at least 40 kc, and adjust the step attenuator to 1000 times that used in step (e). Adjust the frequency until the reading of the previous step is obtained. Determine and record the frequency of this 60-db point. It should be not more than 46 kc away from 500 kc.

(g) Decrease the frequency, and determine the low side 60-db attenuation frequency. Record this frequency. It should be not more than 46 kc away from 500 kc. The total bandwidth should be not more than 82 kc.

(3) Passband Ripple.

Reduce the generator output attenuator to that of step (c) above, sweep the frequency range of 500 ±18 kc, and record the maximum variation of output in decibels. The peak-to-valley ratio should be not more than 3 db.

8. 500-KC PASSIVE FILTER TOUCH-UP.

A. Reassemble the filter and modules into the main frame.

B. Connect the Hewlett-Packard 608D to the receiver input, and tune to the center of any channel. Check by tuning a loosely coupled 51J to 500 kc and adjusting generator frequency for zero beat.

C. Connect a d-c vtvm to TP5 on the i-f and audio module.

D. Tune the slugs of L1 and L9 of FL1 through the access holes in the side of the receiver for maximum vtvm indication.

9. I-F AND AUDIO MODULE ALIGNMENT.

The i-f and audio module requires little alignment but does require very specific evaluation. This module can be aligned right in the receiver.

*If total bandwidth meets requirements at 4 db but plus and minus deviations are not met, realign filter at slightly different frequency in order to make passband more symmetrical about 500 kc.

A. Test Equipment Required.

The following test equipments or their equivalents are required:

(1) Measurements 65B Signal Generator.

(2) Frequency measuring equipment.

(3) D-c vtvm.

(4) Daven Audio Output Meter.

(5) Hewlett-Packard 400C VTVM.

(6) Measurements Model 82 Signal Generator.

(7) Distortion Meter Hewlett-Packard 330D.

(8) Alignment tool, Collins part number 542 4587 002.

(9) Patch Cable Kit, Collins part number 545 5676 005.

B. Conditions.

(1) All tests herein specified shall be conducted under normal factory ambient conditions.

(2) Power supply voltage: 115 v 300-1000 cps and/or 27.5 v d-c depending upon which power supply module is plugged into the 51X-2.

(3) Warmup period: 15 minutes.

C. Preliminary Tests.

Before applying power, disconnect P1, and measure resistance from pin 18 of P1 to ground. This resistance should be approximately 20 ohms. Measure the resistance from pins 6 and 17 to ground. These resistances should be about 30K ohms to 33K ohms respectively. Reconnect P1.

D. Electrical Alignment.

(1) Connect module, and check that tubes light. Set receiver to any convenient channel above 117.95 mc.

(2) Inject 500-kc signal at input of i-f amplifier (TP1) from Measurements 65B Signal Generator, and align transformers T1 and T2 using tuning tool. Connect d-c vtvm to TP5, and adjust cores on top and bottom of T1 and T2 for maximum output.

CAUTION: ADJUST INPUT TO KEEP METER ON 3-V SCALE.

(3) Tune top core (primary) of T3 for maximum output at TP5.

(4) Tune bottom core (secondary) of T3 for minimum output at TP5.

CAUTION: IN ADJUSTING T1, T2, AND T3, TUNE TO THE FIRST RESONANCE ENCOUNTERED AS THE SLUGS MOVE INTO THE COIL.

10. EVALUATION OF I-F AND AUDIO MODULE.

A. Conditions.

The test setup remains the same as in paragraph 9.

B. Selectivity.

(1) Connect Measurements 65B Signal Generator to input of i-f (at TP1). Accurately set the frequency to 500 kc.

(2) Adjust input level to 300 uv, and note reference output level as read on the vtvm at TP5.

(3) Adjust generator output level to 380 uv, and adjust generator frequency to either side of resonance until reference vtvm indicator noted in step (2) is obtained.

(4) Measure the + and -2 db frequencies. These frequencies should not be less than 40 kc apart.

(5) Adjust the signal generator output level to 30,000 uv, and repeat steps (3) and (4) for the 40-db points. The frequencies should not be more than 210 kc apart.

NOTE: If 2-db half bandwidths differ appreciably, repeat alignment paragraph 9.D, using a frequency slightly removed from 500 kc in the direction of the smaller 2-db half bandwidth.

C. Gain.

Adjust signal generator output for 300 uv at 500 kc. The agc voltage at TP5, should be about 2.0 volts.

D. Squelch.

(1) With SQUELCH control on receiver set for maximum gain and signal generator set for 30% modulation, measure the input required at 500 kc to just open the squelch and to just close the squelch. The input should not be more than 150 uv.

(2) With SQUELCH control set for minimum gain and signal generator set for 30% modulation, measure the input required at 500 kc to just open the squelch. The input should not be less than 4500 uv.

(3) With SQUELCH control set about 1/8 turn from the full clockwise position, note the input required to just open squelch and to just close squelch. The ratio should be not more than three decibels.

E. Noise Limiter.

(1) Set the 65B Signal Generator to 1000 uv output, and connect oscilloscope to TP7.

(2) Modulate the signal generator with 1000 cps, and increase the percentage modulation until clipping is observed on the oscilloscope. Note the percentage modulation at which clipping occurs. It should not be less than 70%.

F. Automatic Volume Control.

(1) Adjust the signal generator for 250 uv at 30% modulation at 1000 cps.

(2) Adjust AURAL LEVEL control (R18) for 25 mw output into 500 ohms.

(3) Adjust the signal generator to 50,000 microvolts, and record the decibel change in output using the output level of 25 mw as a reference. The output level should not change more than four decibels.

(4) Adjust signal generator to 100,000 microvolts. Cut off signal, and note the rate of voltage drop at TP5 using the vtvm.

(5) Adjust the receiver frequency to any channel below 118.00 mc. Repeat step (4). Note that the rate of voltage drop is considerably slower. This procedure checks the longer time constant that is necessary for VOR operation below 118.00 mc.

G. ATCSS Output Level and Frequency Response.

(1) Connect Hewlett-Packard 400C VTVM to ATCSS output of i-f and audio module.

(2) Connect the Measurements Model 82 Signal Generator to the input of the i-f and audio module (TP1), and adjust for 200 uv and 30% modulation at 500 kc. Leave receiver set below 118.00 mc.

(3) Set the ATCSS level potentiometer (R12) for 0.5 v output at 1000 cps.

(4) Measure the voltage output at the ATCSS/VOR output of the receiver (pin 18 of the rear connector) for the modulation frequencies specified below, taking care to keep the modulation percentage at 30%. There should be not more than 6 db maximum to minimum.

FREQUENCY (cps)

30	3,000
100	10,000
300	15,000
1000	22,000

H. Audio Output Level and Frequency Response.

(1) Connect Daven Output Meter to audio output terminals of i-f and audio module.

(2) Inject a signal generator output of 200 uv, 30% modulation with receiver tuned above 118.00 mc.

(3) Adjust AURAL LEVEL control (R18) for 100 mw out with 1000-cps modulation.

(4) Measure the response at the following modulation frequencies: 120, 300, 1000, 3750, and 5750 cps. Response should be not less than -20 db at 120 and 5750 cps. From 300 to 3750 cps, the response should vary no more than 6 db.

(5) Readjust AURAL LEVEL control (R18) for 100 mw out at 1000 cps with receiver tuned below 118.00 mc. Channel receiver above 117.95 mc. The decrease in output should be not less than three decibels.

I. Audio Distortion.

(1) Using the 65B Signal Generator and the Hewlett-Packard 330D Distortion Meter, measure the distortion at the audio output using a 1000-cps input, 1000 uv, 30% modulation. Maintain 100 mw output. Distortion should be less than 7.5%.

(2) Repeat measurements at 400 and 3000 cps using an r-f input of 200 uv. The distortion should be less than 7.5%.

NOTE: The 51X-2 is set at the factory for 100 mw of audio output with a 1000-uv signal modulated 30% with 1000 cps at a frequency below 118.00 mc. This setting gives a power output of approximately 40 mw above 118.00 mc in the communications band for 30% modulated signals. This power output may be too high for the particular installation. If it is, adjust the AURAL LEVEL control, R18, in the i-f and audio module to a level suitable for the particular installation.

J. Receiver Disable.

(1) Feed a 1000-uv, 1000-cps, 30% modulated signal to the i-f input.

(2) Disable receiver by applying 27.5 v to rear connector pin number 23, and note the following:

(a) Receiver audio disappears.

(b) Agc voltage drops.

(c) ATCSS output disappears.

(d) The 27 v on pin 19 of the rear plug disappears.

K. Adjustment of Transient Blanker Circuit in 516B-3 D-C Power Supply.

(1) Connect an adjustable d-c power supply, capable of adjustment from 20 to 36 volts, to the 27.5-volt input (terminal 2 of P1 of the 51X-2).

(2) Set R3 of the d-c power supply module 516B-3 to full counterclockwise position.

(3) Adjust the input voltage to 34 v d-c.

(4) Rotate R3 clockwise until output voltage drops down to nearly zero. The output voltage will drop sharply at some point in the rotation of R3.

(5) Starting at approximately 20 volts input, raise the input voltage to the 516B-3 until its output voltage drops off sharply. If the output voltage drops off at or near 36 volts and does not show signs of dropping off at 30 to 32 volts input, then R3 needs no further adjustment.

L. Alternate Method 1 of Adjusting Transient Blanker.

This method of setting the transient blanker does not require a variable d-c supply.

(1) Set R3 counterclockwise to its limit.

(2) Connect a vtvm set to its 0-5 volt (or equivalent) scale to the terminals of Zener diode CR3.

(3) Connect a 0-to 150-volt voltmeter to B plus terminal 2 of capacitor C1.

(4) Apply 27.5 v d-c to the receiver.

(5) Turn potentiometer R3 clockwise until the B plus voltage starts to drop.

(6) Observe the voltage on the vtvm.

(7) Continue to rotate R3 counterclockwise until the vtvm reads 0.3 volt less than the voltage in step (6).

M. Alternate Method 2 of Adjusting Transient Blanker.

This new method makes use of a transient generator of simple construction (see figure 705) which eliminates the need for a variable DC power source. The transient protector circuit of the 516B-3 may be adjusted with the supply operating in the equipment or into a dummy load.

(1) Remove the dust cover of the receiver and connect the vertical input of an oscilloscope between the junction of R7 and C2 and ground located on the power supply. Connect the transient generator in series between the 27.5 VDC primary power and the receiver with its operate switch in the charge position. Plug the power cable of the transient generator into a 115 v 60 cps AC line. Turn on the power to the receiver. Adjust the oscilloscope for only a spot in the middle of the screen, with enough vertical gain to give deflection.

(2) Loosen the locking nut on R3 control on the 516B-3 supply and turn the control fully counterclockwise.

(3) Turn on the transient generator. When the transient generator has charged the capacitance bank to 35 VDC as measured with a meter across the capacitors, throw the operate switch on the transient generator to the discharge position and note upward deflection of spot on the oscilloscope. Return operate switch to charge position.

(4) Turn R3 control clockwise a few degrees at a time while applying 35-volt transients until the spot just deflects downward. At this point lock the control R3 as this is the point where the transient protector of the 516B-3 is cutting out and protecting the power supply from transients of 33 volts or more.

CAUTION: ALWAYS BE SURE TRANSIENT GENERATOR HAS CHARGED TO 35 VOLTS BEFORE DISCHARGING AND THAT THE CONTROL R3 IS LOCKED AT THE POINT WHERE THE SPOT FIRST DEFLECTED IN THE OPPOSITE DIRECTION DOWNWARD. THIS INSURES THAT THE TRANSIENT PROTECTOR CIRCUIT IS NOT SET TOO HIGH OR TOO LOW.

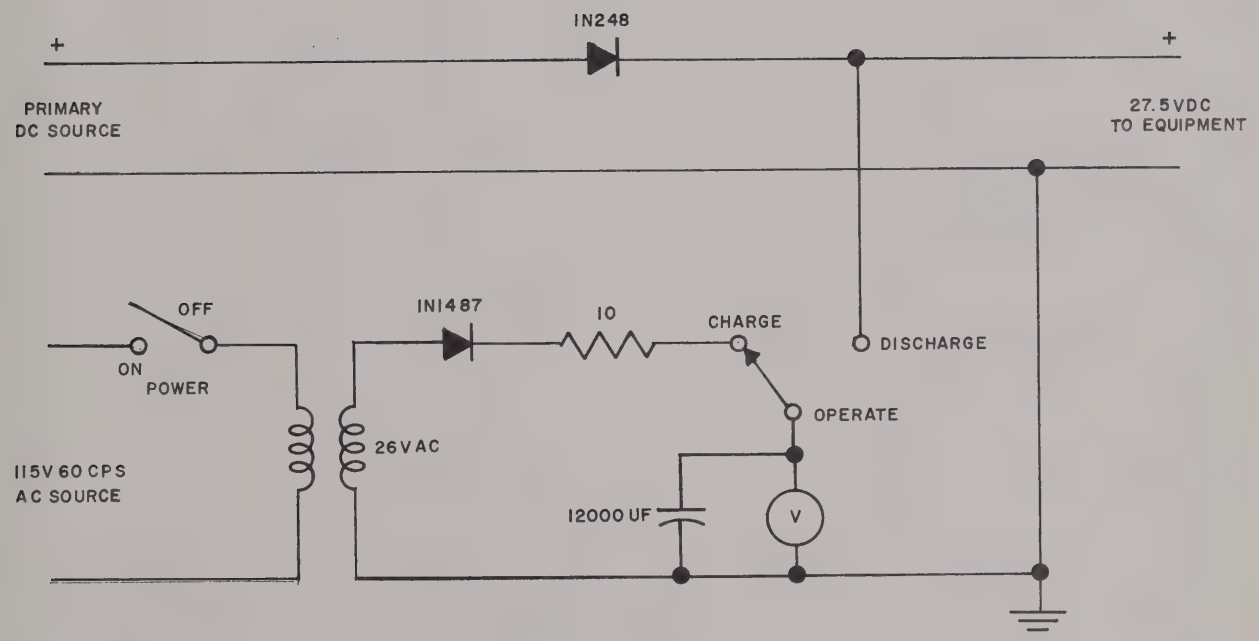

Transient Generator, Schematic Diagram
Figure 705

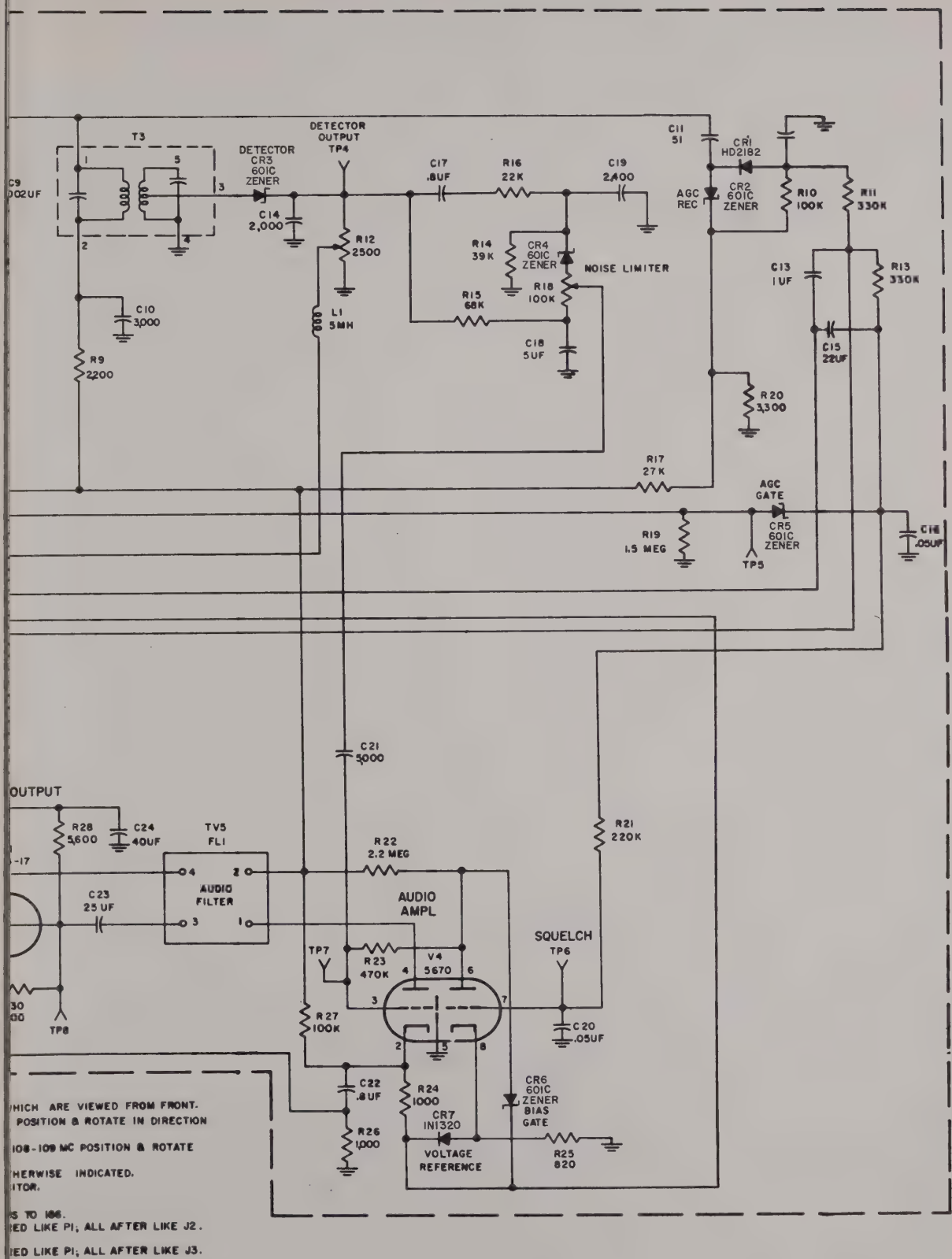

Navigation and Communications Receiver 51X-2,
Schematic Diagram
Figure 706

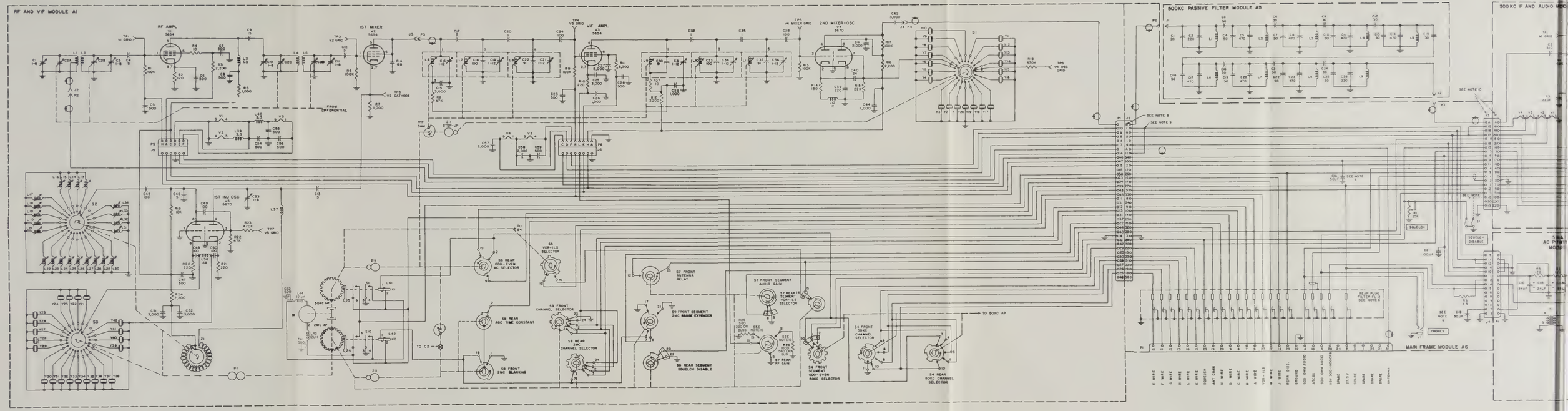
RF AND VIF MODULE A1
RF AMPL
1ST MIXER
VIF AMPL
2ND MIXER-OSC
500KC PASSIVE FILTER MODULE A5
500KC IF AND AUDIO MODULE
MAIN FRAME MODULE A6
1ST INJ OSC
2MC AMP
500KC AP
TO 500KC AP
SEE NOTE 8
SEE NOTE 9
SEE NOTE 10
SEE NOTE 6
SQUELCH
SQUELCH DISABLE
PHONES
REAR PLUG FILTER P2 SEE NOTE 8
FROM DIFFERENTIAL
VIF CAM
STEP-UP
S5 VOR-ILS SELECTOR
S6 REAR 000-EVEN MC SELECTOR
S7 FRONT ANTENNA RELAY
S7 FRONT SEGMENT AUDIO GAIN
S7 REAR 14 SEGMENT VOR-ILS SELECTOR
S8 REAR AGC TIME CONSTANT
S8 FRONT 2MC BLANKING
S9 FRONT CHANNEL SELECTOR
S9 FRONT SEGMENT 2MC MARKER EXTENDER
S9 REAR 2MC CHANNEL SELECTOR
S9 REAR SEGMENT SQUELCH DISABLE
S7 REAR RF GAIN
S4 FRONT SEGMENT 000-EVEN 500KC SELECTOR
S4 FRONT 500KC CHANNEL SELECTOR
S4 REAR 500KC CHANNEL SELECTOR
TO 500KC AP
E WIRE
F WIRE
G WIRE
H WIRE
L WIRE
K WIRE
SQUELCH
ANT CHAN
H WIRE
D WIRE
C WIRE
B WIRE
A WIRE
VOR-ILS
M WIRE
N WIRE
REAR DISC
GROUND
500 OHM AUDIO
ATCES
500 OHM AUDIO
115V 400-1000CPS
SPARE
27.5V
SPARE
SPARE
SPARE
SPARE
ANTENNA

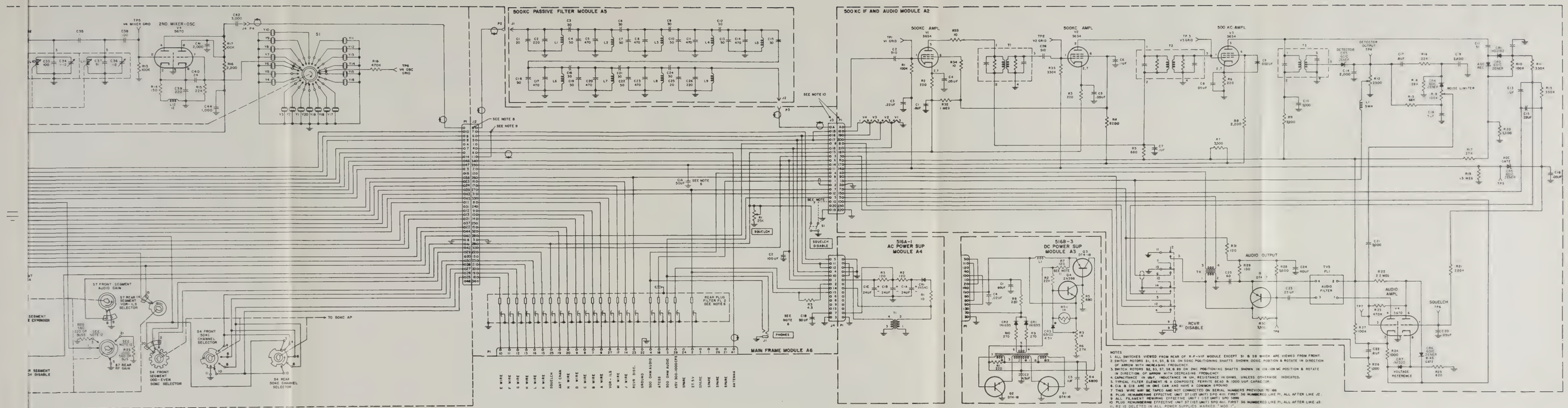

NOTES
1. ALL SWITCHES VIEWED FROM REAR OF R-F-VIF MODULE EXCEPT S1 & S8 WHICH ARE VIEWED FROM FRONT.
2. SWITCH ROTORS S1, S4, S5, & S6 ON 50KC POSITIONING SHAFTS SHOWN 50KC POSITION & ROTATE IN DIRECTION OF ARROW WITH INCREASING FREQUENCY.
3. SWITCH ROTORS S2, S3, S7, S8, & S9 ON 2NC POSITIONING SHAFTS SHOWN IN 108-109 MC POSITION & ROTATE IN DIRECTION OF ARROW WITH DECREASING FREQUENCY.
4. CAPACITANCE IN UUF, INDUCTANCE IN UH, RESISTANCE IN OHMS, UNLESS OTHERWISE INDICATED.
5. TYPICAL FILTER ELEMENT IS A COMPOSITE FERRITE BEAD & 1,000 UUF CAPACITOR.
6. C1A & C1B ARE IN ONE CAN AND HAVE A COMMON GROUND
7. THIS WIRE MAY BE TAPED AND NOT CONNECTED ON SERIAL NUMBERS PREVIOUS TO 186
8. PLUG HEADERING EFFECTIVE UNIT 37 (LIST UNIT) SPO 410; FIRST 36 NUMBERED LIKE P1, ALL AFTER LIKE J2.
9. ALL FILAMENT WIRING EFFECTIVE UNIT 37 (LIST UNIT) SPO 410-1000
10. PLUG HEADERING EFFECTIVE UNIT 37 (LIST UNIT) SPO 410; FIRST 36 NUMBERED LIKE P1, ALL AFTER LIKE J3
11. R2 IS DELETED IN ALL POWER SUPPLIES MARKED "MOD 1".
12. AWR3 AND AWR6 ARE SELECTED VALUES OR BUS WIRE

Navigation and Communications Receiver 51X-2,
Schematic Diagram
Figure 706

VHF NAVIGATION AND COMMUNICATIONS RECEIVER 51X-2
TROUBLE SHOOTING

1. GENERAL.

The usual trouble-shooting practices apply to transistors. Be sure the test equipment and tools meet the requirements outlined in the above paragraphs. It is recommended that transistor testers be used to evaluate the transistors.

2. OHMMETER TEST OF TRANSISTORS.

If a transistor tester is not available, a good ohmmeter may be used for testing. Be sure the ohmmeter meets the requirements as set forth in the paragraph on test equipment, above. To check a PNP transistor, connect the positive lead of the ohmmeter to the base and the negative lead to the emitter. (The red lead is not necessarily the positive lead on all ohmmeters.) Generally, a resistance reading of 50,000 ohms or more should be obtained. Connect the negative lead to the collector; again a reading of 50,000 ohms or more should be obtained. Reconnect the circuit with the negative lead of the ohmmeter to the base. With the positive lead connected to the emitter, a value of resistance in the order of 500 ohms or less should be obtained. Likewise, with the positive lead connected to the collector, a value of 500 ohms or less should be obtained.

Similar tests made on an NPN transistor produces results as follows: With the negative ohmmeter lead connected to the base, the value of resistance between the base and the emitter and between the base and the collector should be high. With the positive lead of the ohmmeter connected to the base, the value of resistance between the base and emitter and between the base and collector should be low. If the readings do not check out as indicated, the transistor probably is defective and should be replaced.

CAUTION: IF A DEFECTIVE TRANSISTOR IS FOUND, MAKE SURE THAT THE CIRCUIT IS IN GOOD OPERATING ORDER BEFORE INSERTING THE REPLACEMENT TRANSISTOR. IF A SHORT CIRCUIT EXISTS IN THE CIRCUIT, PLUGGING IN ANOTHER TRANSISTOR WILL MOST LIKELY RESULT IN ANOTHER BURNED OUT TRANSISTOR. DO NOT DEPEND UPON FUSES TO PROTECT TRANSISTORS.

Make sure that the value of the bias resistors in series with the various transistor elements are as shown on the schematic diagram. The transistor is very sensitive to improper bias voltages; therefore, a short or open circuit in the bias resistors may damage the transistor. For this reason, do not trouble shoot by shorting various points in the circuit to ground and listening for clicks.

VHF NAVIGATION AND COMMUNICATIONS RECEIVER 51X-2
SPECIAL EQUIPMENT AND TOOLS

1. SPECIAL EQUIPMENT AND TOOL REQUIREMENTS FOR OVERHAUL.

Other than the normal shop equipment, two pieces of special equipment are required for overhaul of the 51X-2. These units are: (1) Collins Receiver 51J or equivalent and (2) Collins alignment tool 542 4587 002 or equivalent.

ELECTRICAL WIRE CODE

EXAMPLES

UNSHIELDED WIRE, MIL TYPE B #22 AWG, WHITE WITH RED AND GREEN TRACERS:

D	A	9	25	—	4-1/4
Type of Wire	Size of Wire	Color of Body	Color of Tracers		Length of Wire in Inches (Includes Stripping & Tinning)

SHIELDED WIRE (SINGLE), MIL TYPE C, #15 AWG, WHITE WITH RED AND GREEN TRACERS:

R	D	S	9	25	—	4-1/4
Type of Wire	Size of Wire	Shielded	Color of Body	Color of Tracers		Length of Wire in Inches (Includes Stripping & Tinning)

SHIELDED WIRE (MULTIPLE), MIL TYPE B, #22 AWG, WHITE, AND WHITE WITH RED TRACER:

D	A	S	(9)	(92)	—	4-1/4
Type of Wire	Size of Wire	Shielded	First Conductor	Second Conductor		Length of Wire in Inches (Includes Stripping & Tinning)

TYPE OF WIRE CODE		
LETTER	TYPE OF WIRE	FAMILY USUALLY FOUND IN
A	Cotton Braid Over Plastic (Formerly AN-J-C-48)	440 Plain 443 Shielded
B	Busbar, Round Tinned	421
C	MIL-W-16878 Type B (#20 and Larger) (600 Volts)	439
D	Miniature Wire, MIL-W-16878 Type B (#22 & Smaller)	439-7000 Series
E		
F	Extra Flexible Varnished Cambric	423
G		
H	Kel-F (Monochloro-trifluoroethylene)	422
J		
K	Neon Sign Cable (15,000 Volts)	423 0004 00
L	Silicone	425 0942 00
M		
N	Single Conductor Stranded (Not Rubber Covered)	422
P	Single Conductor Stranded (Rubber Covered)	423
Q		
R	MIL-W-16878 Type C (1000 Volts)	439 1000 Series
T	Teflon, MIL-W-16878 Type E (600 Volts)	439 4000 Series
V	MIL-W-16878 Type D (3000 Volts)	439 3000 Series
W	Teflon, MIL-W-16878 Type EE (1000 Volts)	439 0000 Series
X		
Y		
Z	Acetate Yarn Telephone Type	428

SIZE OF WIRE CODE	
LETTER	SIZE
A	#22 AWG
B	#20
C	#18
D	#16
E	#14
F	#12
G	#10
H	#8
J	#6
K	#4
L	#2
M	#1
N	#0
P	#00
Q	#000
R	#0000
T	#28
V	#26
W	#24
X	#19
Y	#30
Z	

COLOR CODE	
NUMBER OR LETTER	COLOR
0	Black
1	Brown
2	Red
3	Orange
4	Yellow
5	Green
6	Blue
7	Violet
8	Gray (Slate)
9	White
a	Clear
b	Tan
c	Pink
d	Maroon
e	Light Green
f	Light Blue

COLLINS

COLLINS RADIO COMPANY